DEPARTMENT OF DEFENSE VOICE NETWORKS
GENERIC SWITCHING CENTER REQUIREMENTS (GSCR)

08 SEP 2003

DEPARTMENT OF DEFENSE VOICE NETWORKS

GENERIC SWITCHING CENTER REQUIREMENTS (GSCR)

This document specifies technical requirements for a telecommunications switch to be connected to the Defense Switched Network (DSN) in support of dial-up voice, video, and data services. The GSCR reflects current military unique operational requirements and addresses net-centric tenets at the edge of the network to the end instrument. It will be modified in the future, as required, to incorporate net-centric concepts for the DSN backbone as operational requirements and technology evolve. The GSCR conforms to Public Law 107-314 and is the basis for any future telecommunications switch acquisition, independent of the technology.

It is approved for release to authorized government and commercial communities.

Approved by: _____

Priscilla E. Guthrie
Deputy Assistant Secretary of Defense
(Deputy CIO)

Dated: 6 Sep 03

Table of Contents

SECTION 1 – Introduction 1
1.1 Purpose 1
1.2 Role of GSCR in Implementing Public Law 107-314 1
1.3 Requirements 2
1.3.1 Minimum Requirements 3
1.3.2 Conditional Requirements 3
1.4 Applicability 3
1.5 Specification language 3
1.6 DSN System Overview 4
1.6.1 DoD C2 Users 4
1.6.2 DSN Support to Telephony (Voice, Video, Data) Users 6
1.6.3 DSN Support to C2 Users over the Full Range of Stress Levels 7
1.6.4 DSN Architecture 7
1.6.5 DSN Backbone Switches 11
1.6.6 Military/Agency Installation Configuration and Switch Types 12
1.6.6.1 End Office 13
1.6.6.2 Small End Office 13
1.6.6.3 Private Branch Exchange 14
1.6.7 Remote Switching Unit 14
1.6.8 Deployable Voice Exchange 14
SECTION 2 - Capabilities and Features 15
2.0 Introduction 15
2.1 Features Common to Single Users and Business Customers 15
2.1.1 Individual Line 15
2.1.2 CLASS SM Feature: Selective Call Rejection 15
2.1.3 Denied Originating Service 15
2.1.4 Code Restriction and Diversion 16
2.1.5 Call Waiting Features 16
2.1.5.1 Call Waiting (CW) 16
2.1.5.2 Cancel Call Waiting 16
2.1.6 Three-Way Calling (TWC) 16
2.1.7 Add-On Transfer and Conference Calling Features 17
2.1.7.1 Call Transfer Individual - All Calls 17
2.1.7.2 Call Transfer - Internal Only 17
2.1.7.3 Call Transfer -Individual - Incoming Only/Add-on Consultation Hold–Incoming Only 18
2.1.7.4 Call Transfer – Outside 18
2.1.7.5 Call Transfer-Add-on to Fully Restricted Station 18
2.1.7.6 Call Transfer Attendant 18
2.1.7.7 Call Hold 19
2.1.7.8 Conference Calling - Six Way Station Controlled 19
2.1.8 Call Forwarding Features And Call Forwarding Subfeatures 19
2.1.8.1 Call Forwarding Variable 19
2.1.8.2 Call Forwarding Busy Line (CFBL) 19

2.1.8.3 Call Forwarding - Don't Answer - All Calls 20
2.1.8.4 CLASS^{SM} Feature: Selective Call Forwarding 20
2.1.9 Call Pick-Up Features 20
2.1.9.1 Call Pick-Up 20
2.1.9.2 Directed Call Pick-Up 21
2.1.9.3 Directed Call Pick-Up without Barge-In 21
2.2 Attendant Features 21
2.2.1 Precedence and Preemption 21
2.2.2 Call Display 21
2.2.3 Class of Service Override 22
2.2.4 Busy Override and Busy Verification 22
2.2.5 Night Service 22
2.2.6 Automatic Recall of Attendant 22
2.2.7 Calls in Queue to the Attendant 22
2.3 Customer Access Interfaces 23
2.3.1 PBX Line 23
2.3.2 Direct Inward Dialing (DID) 24
2.3.3 National ISDN 1/2 Basic Access 24
2.3.4 National ISDN 1/2 Primary Access. 25
2.3.5 Analog Line 25
2.4 Public Safety Features 25
2.4.1 Basic Emergency Service (911) 25
2.4.2 Tracing of Terminating Calls. 25
2.4.3 Outgoing Call Tracing. 26
2.4.4 Tandem Call Trace. 26
2.4.5 Trace of A Call in Progress. 26
2.5 Trunk, Line, and Special Service Circuit Service Test Features 26
2.5.1 Local Office Test Lines 26
2.5.1.1 100-Type Test Line 26
2.5.1.2 101-Type Test Line 27
2.5.1.3 102-Type Test Line 27
2.5.1.4 105-Type Test Line 27
2.5.1.5 Synchronous Test Line 27
2.5.1.6 Non-synchronous Test Line 27
2.5.1.7 Permanent Busy Test Line 27
2.5.1.8 108-Type Test Line 27
2.5.2 Outside Plant Test Lines 27
2.5.2.1 Dialable Cable Pair Locator Tone 27
2.5.2.2 DTMF Station Test Circuit 28
2.5.3 Test Incoming Trunks in Tandem or Local State 28
2.5.4 Manual Testing 28
2.5.4.1 Manual Test of Line 28
2.5.4.2 Manual Test of Trunks 28
2.5.5 Trunk Group - Remove from Service (Make Busy) 28
2.5.6 Trunk Group - Restore to Service (Make Idle) 28
2.5.7 Carrier Group Alarm (CGA) 28

2.5.7.1 Software Carrier Group Alarm 29
2.6 Preset Conferencing 29
2.6.1 Conference Notification Recorded Announcement 30
2.6.2 Automatic Retrial and Alternate Address 30
2.6.3 Bridge Release 31
2.6.4 Lost Connection to Conferee or Originator 31
2.6.5 Secondary Conferencing 31
2.7 Address Translation 31
2.8 Nailed-Up Connections 32
2.9 Assured Dial Tone 32
2.10 DSN Remote Switch Unit (RSU) Requirements 33
2.10.1 Introduction 33
2.10.2 Normal Operating Condition – Connected To The Host 33
2.10.3 Degraded Operating Conditions 33
2.10.3.1 Stand-Alone Condition 33
2.10.3.2 Partial Stand-Alone Condition 34
2.11 Control of Precedence Calls 34
2.11.1 Precedence Access Threshold (PAT) 34
2.11.1.1 Call Screening 34
2.11.1.2 Functional Structure 35
2.11.1.3 Simultaneous Calls Limitation 35
2.11.1.4 Overflow Process 36
2.11.1.5 Decrementing the Calls-In-Progress Count 36
2.11.1.6 Call Treatment 37
2.11.1.7 Queuing 37
2.11.1.8 Attendant Calls 37
2.11.1.9 Operational Measurement Registers 38
2.11.1.10 Maintenance and Administration of Thresholds 38
2.12 DSN Hotline Service 38
2.12.1 Protected Hotline Calling 39
2.12.2 Pair Protected Hotline Calling 39
2.12.3 Unprotected Hotline Receiving 39
2.12.4 Protected Hotline Receiving 39
2.12.5 User Interoperability 39
2.13 Measurements and Data Generation 40
2.13.1 Common Data Requirements 40
2.13.1.1 Data Quality 40
2.13.2 Circuit Switched Network Measurements 40
2.13.2.1 Basic Switch Performance 40
2.13.2.1.1 Traffic Measurements 40
2.13.2.1.2 Reference Data 40
2.13.2.2 Line Servicing 40
2.13.2.3 Trunk Groups 40
2.13.2.4 Call Processor 41
2.13.2.5 Switch Services 41
2.13.2.6 Special Studies 41

2.13.2.7 Remote Switching Site 41
2.13.2.8 Features 41
2.13.3 Common Channel Signaling Network (CCSN) Measurements 41
2.13.4 ISDN Measurements 41
2.13.5 Traffic Capacity 41
SECTION 3 – Multi-Level Precedence and Preemption (MLPP) 43
3.0 Introduction 43
3.1 Multi-Level Precedence and Preemption (MLPP) Overview 43
3.1.1 Description 43
3.1.2 Precedence Levels 44
3.1.3 Announcements 44
3.1.4 Invocation and Operation. 45
3.2 Preemption in the Network 47
3.2.1 Network Facilities Active With Lower Precedence Calls 47
3.2.1.1 CANCEL to (CANT) / CANCEL from (CANF) 47
3.2.2 Network Facilities Active With Equal or Higher Precedence Call 47
3.2.3 MLPP Trunk Selection (Hunting). 47
3.2.3.1 Hunt Sequence for Trunks 48
3.2.3.1.1 ROUTINE Calls 48
3.2.3.1.2 Precedence Calls Above ROUTINE 48
3.2.4 MLPP Interworking with Other Networks 52
3.2.4.1 Calls From non-MLPP Networks 52
3.2.4.2 Precedence Calls to Non-MLPP Networks 52
3.3 Precedence Call Diversion 52
3.4 Preempt Signaling 53
3.4.1 Channel Associated Signaling (CAS) 53
3.4.2 Primary Rate Interface (PRI) 56
3.4.3 Common Channel Signaling Number 7 (CCS7) 56
3.5 Analog Line MLPP 57
3.5.1 Busy At The Called Party's Interface 57
3.5.1.1 Line Active With A Lower Precedence Call 57
3.5.1.2 Line Active With An Equal or Higher Precedence Call Above Routine 57
3.6 ISDN MLPP Basic Rate Interface (BRI) 57
3.6.1 General Description 57
3.6.2 Single B-Channel, Single Appearance, Single Directory Number (DN) 58
3.6.2.1 Line Active With A Lower Precedence Call 58
3.6.2.2 Line Active With An Equal or Higher Precedence Call 58
3.6.3 Single B-Channel, Multiple Appearances, Single Directory Number (DN) 58
3.6.4 Two (2) B-Channels, Multiple Appearances, Single Directory Number (DN) 59
3.6.5 Two B-Channels, 2 Directory Numbers (DN) 59
3.7 ISDN MLPP Primary Rate Interface (PRI) 60
3.7.1 Definitions 60
3.7.2 Precedence Level Information Elements 60
3.7.3 Disconnect Message Information Cause Values 62
3.7.4 Signal Information Element 63
3.7.5 ANSI T1.619a Setup Message Called Party Number Format 63

3.7.6 ANSI T1.619a and non-ANSI T1.619a Interaction 64
3.8 MLPP Interactions with Common Optional Station Features and Services 65
3.8.1 Precedence Call Waiting 65
3.8.1.1 Busy with higher precedence call 65
3.8.1.2 Busy with equal precedence call 65
3.8.1.3 Busy with lower precedence call 65
3.8.1.4 No Answer 66
3.8.2 Call Forwarding 66
3.8.2.1 Call Forwarding at a Busy Station 66
3.8.2.2 Call Forwarding - No Reply at Called Station 67
3.8.3 Call Transfer 67
3.8.4 Call Hold 67
3.8.5 Three-Way Calling (TWC) 70
3.8.6 Call Pick-Up 70
3.8.7 Preset Conferencing 70
3.8.7.1 Conference Precedence Level 71
3.8.8 Multiline Hunt Service 71
3.8.9 Community of Interest (COI) 72
3.8.9.1 Definition of Terms 72
3.8.9.2 Feature Requirements 75
3.8.9.2.1 COI Screening treatment for Originating Call Requests 75
3.8.9.2.2 COI Screening treatment for Terminating Call Requests 76
3.9 MLPP Common Channel Signaling Number 7 (CCS7) 77
3.9.1 General Description 77
3.9.2 Definitions 78
3.9.3 Look-Ahead For Busy (LFB) 79
3.9.4 Precedence Parameters 79
3.9.4.1 Actions Required at Originating Exchange 80
3.9.4.2 MLPP CCS7 Transaction Capability Application Part (TCAP) -Definitions and Functions of Transaction Capability (TC) Operations, Parameters, and Error Codes 81
3.9.4.2.1 Parameters 81
3.9.5 RELEASE Message Cause Values 82
3.9.6 DSN MLPP CCS7 Initial Address Message (IAM) Called Party Number Format 82
3.10 Channel associated signaling to Common channel signaling (CAS-to-CCS) trunk inter-working in a mixed media network 83
3.11 MLPP Interactions with Electronic Key Telephone Systems (EKTS) Features 88
3.11.1 Electronic Key Telephone Systems (EKTS) 88
3.11.1.1 Call Appearances 88
3.11.1.2 Hold 88
3.11.1.3 DN Bridging 88
3.11.1.4 Intercom Calling 88
3.11.1.5 Abbreviated Or Delayed Ringing Treatment On Incoming Calls 88
3.11.1.6 Bridged Call Exclusion (BCE) 89
3.11.1.7 Non-ISDN Users 89
3.12 Backward Compatibility 89
3.12.1 Precedence Parameter 89

3.12.2 Cause Values & Location Codes 89
3.13 Network Management Manual Controls 90
3.14 Data Collection 90
SECTION 4 - Call Processing 92
4.0 Introduction 92
4.1 Call Treatments 92
4.1.1 Origination Treatment 92
4.1.1.1 Originating Busy 93
4.1.2 Termination Treatment 93
4.1.2.1 Busy or Idle Status 93
4.1.3 Release Treatment 93
4.1.4 Interruption Treatment 93
4.1.5 Connections 94
4.1.6 Class of Service 94
4.2 Primary and Alternate Routing 94
4.3 User Access Line Call Processing (Non-CCS/ISDN Type) 94
4.3.1 Ear & Mouth (E&M) Lead Signaling States 94
4.3.2 Four-Wire Analog User Access Lines 94
4.3.3 Two-Wire User Access Lines 94
4.3.4 Termination to Analog Lines 99
4.3.4.1 Busy/Idle Status 99
4.4 DSN Interswitch Trunk(IST) Call Processing (Non-CCS/ISDN Type) 99
4.4.1 Originating Call Processing 99
4.4.2 Terminating Call Processing 103
4.5 Code Interpretation 106
4.5.1 Defense Switched Network World Wide Numbering and Dialing Plan 106
4.5.1.1 DSN User Dialing. 106
4.5.1.2 Interswitch and Intraswitch Dialing. 107
4.5.1.2.1 Seven-Digit Dialing. 107
4.5.1.2.2 Ten-Digit Dialing. 107
4.5.1.3 Access Code. 108
4.5.1.3.1 Access Digit 108
4.5.1.3.2 Precedence Digit 108
4.5.1.3.3 Service Digits 108
4.5.1.4 Route Code 109
4.5.1.5 Area Code 110
4.5.1.6 Switch Code 110
4.5.1.7 Line Number 110
4.5.1.8 Emergency Service 911 Conflict Resolution 110
4.5.2 DSN Switch Outpulsing Digit Formats 110
4.5.2.1 Route Control Digit (RCD) [Inclusive thru 4.5.2.1.9] 112
4.5.2.1.1 Conceptual Backbone Network Structure. 112
4.5.2.1.2 Routing Procedures. 116
4.5.2.1.3 Route Control Principles. 116
4.5.2.1.4 Route Control Digit. 117
4.5.2.1.5 Route Control Digit Rules. 117

4.5.2.1.6 Exterior Routing Rules 118
4.5.2.1.7 Interior Routing Rules 120
4.5.2.1.8 Subscribers on a Multifunction Switch 121
4.5.2.1.9 Dual-Theater/Homed End Offices with Single Addresses 121
4.5.3 Standard Directory Numbers 124
4.5.4 Standard Test Numbers 125
4.5.5 Base Services – Abbreviated Numbers 125
4.5.6 Digit Reception Requirements 126
4.5.7 Digit Registration Capacity 126
4.5.8 Screening 126
4.5.8.1 Zone Restriction Servicing of Local Originators. 126
SECTION 5 – Signaling 127
5.0 Introduction 127
5.1 Network Power Systems for External Interfaces 127
5.2 Line Signaling 127
5.2.1 Loop Start Line. 127
5.2.2 Ground Start Line. 127
5.3 Trunk Supervisory Signaling 128
5.3.1 Reverse Battery (RB) 128
5.3.2 Immediate Start 128
5.3.3 Normal and Abnormal Wink Start Operation 128
5.3.3.1 Normal Wink Start Operation 128
5.3.3.2 Glare Operation 128
5.3.3.3 Abnormal Operation 129
5.3.3.3.1 Wink Start 129
5.3.3.3.2 Glare Resolution 129
5.3.4 Delay Dial 129
5.3.5 Call for Service Timing 129
5.3.6 Guard Timing 129
5.3.7 Satellite Interface 129
5.3.8 Disconnect Control 130
5.3.9 Reselect or Retrial 130
5.3.10 Off-Hook Supervision Transitions (Unexpected Stop) 130
5.4 Control Signaling 131
5.4.1 Dial-Pulse (DP) Signals 131
5.4.2 Dual Tone Multi-Frequency (DTMF) Signaling 131
5.4.2.1 Standard Digit Format for Precedence 131
5.4.3 Multi-Frequency (MF R1 2/6) Signaling 131
5.5 Alerting Signals and Tones 132
5.5.1 Ringing 132
5.5.2 DSN Information Signals 133
5.6 Common Channel Signaling Number 7 (CCS7) 133
5.6.1 CCS7 Network Structure 134
5.6.2 Functional Description of the Signaling System Message Transfer Part (MTP) 134
5.6.2.1 Signaling System Structure – Functional Levels 135
5.6.2.1.1 Signaling Data Link Functions (Level 1) 135

5.6.2.1.2 Signaling Link Functions (Level 2) 135
5.6.3 Signaling Network Functions and Messages 135
5.6.3.1 Routing Label 135
5.6.3.2 Handling Messages Under Signaling Link Congestion 135
5.6.3.3 Message Discrimination and Distribution Functions 135
5.6.3.4 Signaling Network Management 136
5.6.3.5 Changeback 136
5.6.4 Noncircuit - Related Information Exchange - Signaling Connection Control Part (SCCP) 136
5.6.5 Additional Procedures for Switch-to-Switch/SCP TCAP Messages 136
5.6.6 Message Transfer Part (MTP) Restart 136
5.6.7 Signaling Link Management 136
5.6.8 Signaling Route Management 137
5.6.9 Common Characteristics of Message Signal Unit (MSU) Formats 137
5.6.9.1 Service Indicator 137
5.6.9.2 Subservice Field 137
5.6.10 Formats and Codes of Signaling Network Management Messages 137
5.6.11 Numbering of Signaling Point Codes 138
5.6.12 Functional Descriptions of the Integrated Services Digital Network (ISDN) User Part 138
5.6.12.1 Scope, Purpose, and Application 138
5.6.12.2 End-To-End Signaling 138
5.6.13 Formats and Codes – Integrated Services Digital Network (ISDN) User Part Parameters 138
5.6.13.1 Notification Indicator 139
5.6.13.2 IS-UP Messages 139
5.6.13.3 IS-UP Parameters 139
5.7 ISDN DSS1 Signaling 139
5.7.1 DSN ISDN User to Network Signaling. 139
5.7.1.1 Application 139
5.7.1.2 Physical Layer. 140
5.7.1.2.1 S/T Reference Point 140
5.7.1.3 Data-Link Layer. 140
5.7.1.3.1 Data-Link Connections 140
5.7.1.3.2 Peer-to-Peer Procedures of the Data-Link Layer 140
5.7.1.4 Layer 3 DSN User-to-Network Signaling 141
5.7.1.4.1 Overview of Layer 3. 141
5.7.1.4.2 DSN User-to-Network Signaling for Circuit-Switched (CS) Bearer Service. 141
5.7.1.4.3 Sequence of Messages for DSN Circuit-Switched (CS) Calls 141
5.7.1.4.4 Message Functional Definitions and Content 141
5.7.1.4.5 General Message Format and Information Elements (IE) Coding 143
5.7.1.4.6 Supplementary Services. 144
SECTION 6 – Transmission 147
6.0 DSN Transmission Interface 147
6.1 Input Impedance 147
6.2 Inserted Connection Loss 147

6.2.1 Average Loss At 1004 Hz And Loss Control 148
6.2.2 Loss Variability At 1004 Hz 148
6.2.3 Attenuation Distortion 148
6.2.4 Tracking Error 149
6.3 Frequency Response 150
6.4 Overload Level 151
6.5 Return Loss 151
6.5.1 Two-Wire Line Return Loss 151
6.5.2 Four-Wire Trunk Return Loss (Impedance) 151
6.6 Longitudinal Balance 152
6.7 60 Hz Longitudinal Current 152
6.8 Idle Channel Noise 152
6.8.1 C-Message Weighting 152
6.8.2 Flat-Weighting Noise 153
6.9 Power Line Interference 153
6.10 Impulse Noise 153
6.11 Crosstalk Coupling 153
6.12 Intermodulation Distortion 153
6.13 Signal To Distortion Ratio (C-Notched Noise) 154
6.14 Absolute Delay 154
6.15 Envelope Delay Distortion 154
6.15.1 Echo Path Delay 155
6.16 Bit Integrity 155
6.17 Switched Digital Bit Error Rate 155
6.18 Encoding And Decoding Levels 155
6.18.1 DSN Fixed Loss Plan 156
6.18.1.1 Switch Transmission Level Points (TLPs). 156
SECTION 7 - System Interfaces 157
7.0 Introduction 157
7.1 PCM-24 Digital Trunk Interface 157
7.1.1 Interface Characteristics 157
7.1.2 Supervisory Channel Associated Signaling 159
7.1.3 Clear Channel Capability (CCC). 160
7.1.4 Alarm and Restoral Requirements. 160
7.2 PCM-30 Digital Trunk Interface 161
7.2.1 Supervisory Channel Associated Signaling 162
7.2.2 Alarm and Restoral Requirements 163
7.3 Interoperation of PCM-24 and PCM-30 Systems 163
7.4 Analog Trunk Interface 163
7.4.1 E&M Trunk Circuits 163
7.4.2 Single Frequency (SF) Trunk Circuits 164
7.4.3 Dual Frequency (DF) Trunk Circuits 164
7.5 Integrated Digital Loop Carrier (IDLC) 164
SECTION 8 - Tandem Switching 166
8.0 Introduction 166
8.1 Network Plan 166

8.2 System Architecture 166
8.3 Tandem Capabilities 166
8.4 Call Processing 169
8.5 Signaling 169
8.6 Transmission 169
8.7 Measurements and Administration 169
8.8 Service Standards 169
8.9 Network Management (NM) 170
SECTION 9 - Network Management 172
9.0 Introduction 172
9.1 DISA/DSN Network Management 172
9.2 Measurements and Data Generation 173
9.2.1 Common Data Requirements 173
9.2.1.1 Data Quality 173
9.2.2 Circuit Switched Network Measurements 173
9.2.2.1 Basic Switch Performance 173
9.2.2.1.1 Traffic Measurements 173
9.2.2.1.2 Reference Data 174
9.2.2.2 Line Servicing 174
9.2.2.3 Trunk Groups 174
9.2.2.4 Call Processor 174
9.2.2.5 Switch Services 174
9.2.2.6 Special Studies 174
9.2.2.7 Remote Switching Site 174
9.2.2.8 Features 174
9.2.3 Common Channel Signaling Network (CCSN) Measurements 175
9.2.4 ISDN Measurements 175
9.2.5 Traffic Capacity 175
9.3 Fault Management 175
9.4 Configuration Management (CM) 175
9.5 Automated Message Accounting (AMA) 175
9.5.1 DSN CDR Fields 176
9.5.2 CDR Data Retention 176
9.6 Performance Management 177
9.7 Network Management Controls 179
9.7.1 Automatic Controls 179
9.7.1.1. Automatic Congestion Controls (ACC) 180
9.7.1.2. Trunk Reservation (TRE) 180
9.7.1.3. Selective Incoming Load Controls (SILC) 180
9.7.1.4. Precedence Access Threshold (PAT) 181
9.7.2 Overload Controls 181
9.7.2.1. Essential Service Protection (ESP) 181
9.7.3 Manual Controls 181
9.7.3.1 Trunk Group Controls 182
9.7.3.1.1 Cancel From (CANF) 182
9.7.3.1.2 Cancel To (CANT) 182

9.7.3.1.3 SKIP 183
9.7.3.1.4 Reroute (RR) 183
9.7.3.2 Code Controls 184
9.7.3.2.1 Code Controls - Code Gapping Controls 184
9.7.3.3 Total Office Manual Control Removal - Request/Response 185
9.7.4 Treatment Options Of Calls That Are Terminated 185
9.8 Remote Access to Switch 186
SECTION 10 - Integrated Services Digital Network (ISDN) Generic Requirements 187
10.0 Introduction 187
10.1 DSN Generic ISDN Features and Interface Descriptions 187
SECTION 11 – Synchronization 195
11.0 Introduction 195
11.1 Timing Modes 195
11.1.1 External Timing Mode 195
11.1.1.1 External Timing Mode 195
11.1.1.2 Line Timing Mode 195
11.1.2 Internal Clock Requirements 196
11.1.2.1 General 196
11.1.2.2 Stratum 4 Clock 196
11.2 Synchronization Performance Monitoring Criteria 196
11.3 DS1 Traffic Interfaces 196
11.4 DS0 Traffic Interconnects 196
SECTION 12 – Reliability 197
SECTION 13 – Security 199
Acronyms 201
Reference List 209
Appendix 1 – Requirements Matrix 213
Appendix 2 - Deployable Voice Exchanges/Switch (DVX) 229
A2.1 Background 229
A2.1.1 Background 229
A2.1.2 Purpose 230
A2.2 Applicability 230
A2.3 Deployment Context 231
A2.3.1 Voice Networks 231
A2.3.2 Deployed Voice Exchanges / Switch DVX's 231
A2.3.3 Deployed Voice Exchanges / Access to DSN and/or Commercial Gateways 231
A2.4 Conclusion 232
SUBJECT 252
DVX/COTS 252
SUBJECT 254
TYPE OF SWITCHES 254

List of Tables

Table 1-1. Trunk types and signaling used in the DSN (includes legacy interfaces). 9
Table 1-2. Subscriber Access Lines Used in the DSN..... 10
Table 1-3. Trunk and Line Types Required By Switch Type..... 11
Table 3-1. Announcements 45
Table 3-2. Multi-Level Precedence and Preemption Signaling Sequences 56
Table 3-3. Precedence Level Information Element (Codeset 5)..... 61
Table 3-4. Disconnect Message Cause Value..... 62
Table 3-5. US National Codepoints for Signal Values 63
Table 3-6. ANSI T1.619a ISDN Setup Message Called Party Number Format..... 63
Table 3-7. COI Checks for an originating call request. 75
Table 3-8. COI Checks for a Terminating call request. 77
Table 3-9. Precedence Parameter and Sub Fields..... 79
Table 3-10. RELEASE Message Cause Values..... 82
Table 3-11. DSN Switch MLPP CCS7 IAM Called Party Number Format..... 82
Table 3-12. CAS-to-CCS Trunk Interworking Matrix (Line-to-Trunk and Trunk-to-Line) 84
Table 3-13. CAS-to-CCS Trunk Interworking Matrix (Trunk-to-Trunk) 87
Table 4-1. E&M Lead Signaling States 95
Table 4-2. Call Processing - Four-Wire User Access Lines 95
Table 4-3. Call Processing Two-Wire User Access Lines..... 97
Table 4-4. Originating Call Processing Toward DSN From DSN ISTs..... 99
Table 4-5. Terminating Call Processing From DSN TO DSN ISTs..... 103
Table 4-6. DSN User Dialing Format 106
Table 4-7. Precedence And Service Access Codes..... 108
Table 4-8. Route Code Assignment 109
Table 4-9. DSN Switch MFR1 Outpulsing Digit Format 111
Table 4-10. DSN Switch DTMF Outpulsing Digit Format 111
Table 4-11. Route Control digit Logic..... 118
Table 4-12. Route Control Digit Logic for Exterior Routing 119
Table 4-13. ROUTINE CALLS 119
Table 4-14. Precedence Calls Above ROUTINE – Idle Search Sequence 119
Table 4-15. Precedence Calls Above ROUTINE – Preemptive Search Sequence 119
Table 4-16. Route Control Digit Logic for Interior Theater/Home Grid Routing..... 120
Table 4-17. ROUTINE CALLS 120
Table 4-18. Precedence Calls Above ROUTINE – Idle Search Sequence 120
Table 4-19. Precedence Calls Above ROUTINE – Preemptive Search Sequence 121
Table 4-20. Route Control Digit Logic in G12 Centers..... 122
Table 4-21. ROUTINE CALLS 122
Table 4-22. Precedence Calls Above ROUTINE– Idle Search Sequence 123
Table 4-23. Precedence Calls Above ROUTINE– Preemptive Search Sequence 123
Table 4-24. Standard Directory Numbers..... 125
Table 4-25. Standard Test Numbers 125
Table 5-1. Reselect or Retrial 130

Table 5-2. DTMF Generation and Reception from Users and Trunks 131
Table 5-3. MF(R1)2/6 Generation and Reception for Trunks 132
Table 5-4. DSN Ringing Tone and Cadence 132
Table 5-5. DSN Information Signals 133
Table 5-6. Setup Message For MLPP Call 143
Table 6-1. Input Impedance Requirements 147
Table 6-2 Average Loss Requirements 148
Table 6-3. Maximum Loss Variability 148
Table 6-4. Attenuation Distortion 148
Table 6-5. Tracking Error 149
Table 6-6. Trunk-to-Trunk Frequency Response 150
Table 6-7. Line-To-Line Frequency Response 151
Table 6-8. Longitudinal Balance 152
Table 6-9. C-Message Waiting 152
Table 6-10. Intermodulation Distortion 153
Table 6-11. Signal-to-Noise Distortion 154
Table 6-12. Envelope Delay Distortion Limits 154
Table 6-13. Echo Path Delay 155
Table 6-14. End-to-End Loss 156
Table 7-1. PCM-24 Electrical Interface Characteristics 157
Table 7-2. PCM-24 D3/D4 Interface Characteristics 158
Table 7-3. PCM-24 ESF Interface Characteristics 159
Table 7-4. PCM-24 Alarm and Restoral Requirements 160
Table 7-5. PCM-30 Electrical Interface Characteristics 161
Table 7-6. Allocation Of Time Slot 16 162
Table 7-7. PCM-30 Alarm And Restoral Requirements 163
Table 8-1. Tandem Features 167
Table 9-1. Call Detail Recording Data 176
Table 10-1. BRI Access, Call Control, and Signaling 188
Table 10-2. Uniform Interface Configurations for BRIs 188
Table 10-3. BRI Features 190
Table 10-4. PRI Access, Call Control, and Signaling 192
Table 10-5. PRI Features 192
Table 10-6. Packet Data Features and Capabilities 193
Table A2-1: Voice Certification Requirements 236

List of Figures

Figure 1-1. Requirement Procedures 2
Figure 1-2. DSN Architecture and Components 9
Figure 1-3. Example Installation Configurations 13
Figure 3-2. DSN Preempt Signals 54
Figure 3-3. Call Hold Scenarios 69
Figure 4-1. Theater/Home Grid Array 114
Figure 4-2. Basic Polygrid Pattern 115
Figure 4-3. Dual-Homed End Office with Single Address Grid Array. 124
Figure 5-1. CCS7 Backbone Network Architecture 134

SECTION 1 – Introduction

1.1 Purpose

The purpose of this Generic Switching Center Requirements (GSCR) document is to specify the technical requirements for a telecommunications switch to be used in the Department of Defense (DoD) network in support of voice, video and data services. The DoD voice network consists of three major networks, the Defense Switched Network (DSN), Defense RED Switch Network (DRSN), and tactical networks.

This document specifies the technical requirements for the DSN and commercial type Deployable Voice Exchanges (DVXs) (a tactical element, see paragraph 1.5.6). This document excludes the DRSN, tactical networks (e.g., Tri-Tac, MSE), except for the interface requirements. This is a technical specification document to support the policies and requirements established by Chairman, Joint Chiefs of Staff Instruction (CJCSI) 6215.01B.This document may be used to support acquisition, testing, network management, configuration management, and policy development processes. This document identifies only the MINIMUM requirements and features applicable to the overall DoD community. This document may not contain a complete set of specifications for a commercial telecommunications switch. Procuring Agencies may need to include other specifications or additions to have a complete product specification.

1.2 Role of GSCR in Implementing Public Law 107-314

Congress passed Public Law 107-314 / House Resolution 4546: National Defense Authorization Act (NDAA) for FY03. House Report 107-436 on H.R. 4546. The GAO noted about the DoD processes that the law addresses,

- "This provision would require the Secretary of Defense to establish a clear, uniform, and enforceable policy, applicable to all military and defense agencies, regarding the testing and certification requirements that must be satisfied before a telecom switch can be connected to the Defense Switch Network."

- "The committee understands that there is a current policy in place, but believes the current policy is not well defined and does not have clear requirements for certifying and connecting telecom switches. The Department of Defense must apply the new policy consistently, or risk vendor re-evaluating the Department as a customer. "

The new law defines a telecom switch as follows:

- "In this section, the term "telecom switch" means hardware or software designed to send and receive voice, data, or video signals across a network that provides customer voice,

data, or video equipment access to the Defense Switch Network or public switch telecommunications network."

A DoD Instruction is being developed by OSD(C3I) to implement the Public Law.

The primary DSN User Requirements are identified by the Joint Staff in CJCSI 6215.01B, the Global Information Grid (GIG) Capstone Requirements Document JROCOM 134-01 and in DoDI 5200.40 "Department of Defense Information Technology Security Certification and Accreditation Process (DITSCAP)". The DISA DSN SSM translates the JS requirements into network and telecom switch requirements via the DSN Architecture and System Design and the DSN System Security Authorization Agreement (SSAA). The DSN SSM develops the DSN Generic Switching Center Requirements (GSCR) Document. DISA JITC develops the DSN Generic Switching Test Plan (GSTP) based on the DSN GSCR to be used in interoperability certification of telecom switches. The DISA Center for Information Assurance Applications develops the DSN Security Technical Implementation Guide (STIG) and develops the DSN Information Assurance Test Plan (IATP) based on the DSN STIG to be used in security certification and accreditation of telecom switches. An overview of the requirements procedures is depicted in Figure 1-1.

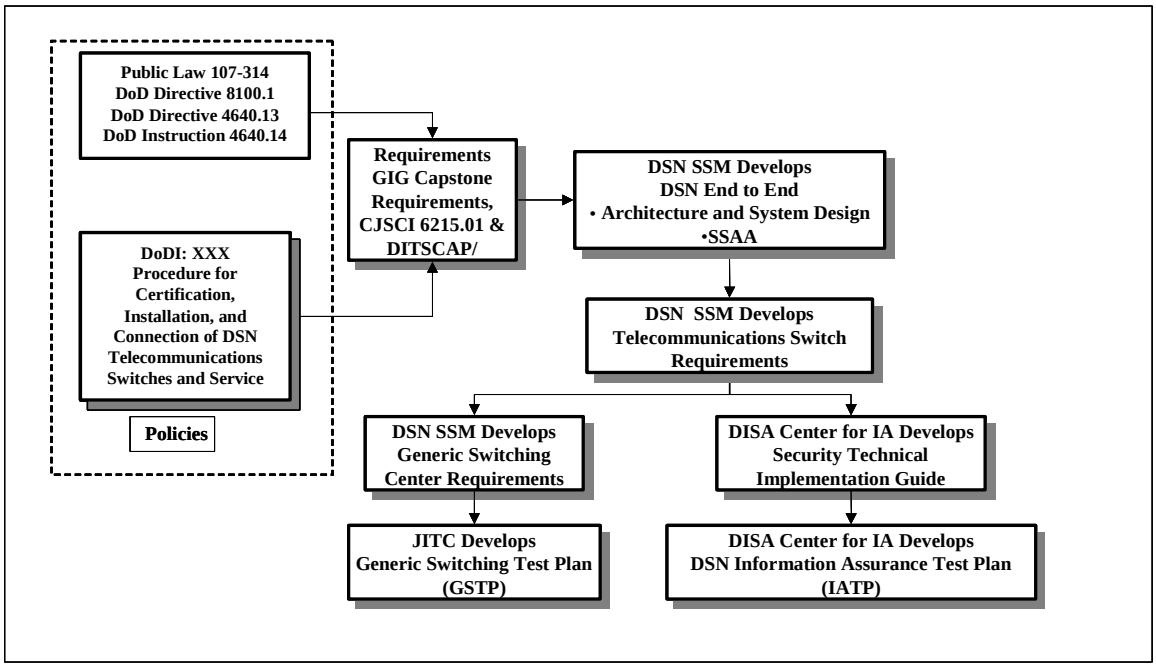

Figure 1-1. Requirement Procedures

1.3 Requirements

This GSCR identifies the minimum functional requirements and performance requirements for circuit switched systems used in the Defense Switched Network (DSN). DSN switch features fall into two categories: Minimum requirements and conditional requirements.

1.3.1 Minimum Requirements

Minimum Requirements are features and capabilities considered necessary for a particular switch type to support warfighter missions in DoD. These features and capabilities will require certification prior to introduction into the DSN.

1.3.2 Conditional Requirements

Conditional requirements are features and capabilities that are not considered critical for DoD mission support based on DoD policies. It is however, recognized that such features do have utility for some users or for specific operations. To ensure interoperability and consistency of the Multi-Level Precedence and Preemption (MLPP) functionalities across all platforms, these features and capabilities are specified with set parameters. If these features and capabilities are provided, the switch shall perform and meet the specifications as identified in this GSCR.

1.4 Applicability

This specification applies to all DSN switches procured or leased for installation in the DSN. All services, features and functions (both unique military and standard commercial) identified in this GSCR are to be implemented in DSN assets including switches, trunks, lines, Customer Premises Equipment (CPE), and ancillary equipment. This specification also applies to upgrades and new software loads for existing equipment.

The GSCR is the governing specification document that takes precedence over the explicit or implicit requirements of subsidiary or reference documents, standards, and specifications. In the event of conflict, the explicit requirements of the GSCR take precedence over the explicit or implicit requirements of the LATA Switching Systems Generic Requirements (LSSGR), Generic Requirements (GR), and DISAC 370-175-13.

The GSCR dated 1987 was written as a Military specification for a switching facility. The 1997 GSCR changed the applicability from a facility specification to a hardware specification (a telecommunications switch), and used the commercial standards LSSGR as the base structure. This revision of the GSCR continues the use of the LSSGR as the base requirement, but references each Generic Requirements (GR) document directly. Except for Military Unique Features (MUFs) such as MLPP, there should be no differences in the technical specifications between the LSSGR and this GSCR.

1.5 Specification language

The word "MUST", or the terms "REQUIRED" or "SHALL" mean that the definition is an absolute requirement of the specification.

The phrase "MUST NOT," or the phrase "SHALL NOT," means that the definition is an absolute prohibition of the specification.

The word "MAY," or the adjective "CONDITIONAL," means that an item is optional.

The phrase "THE NETWORK" as referenced in the LSSGR shall mean the DSN network.

1.6 DSN System Overview

As approved by the Office of the Secretary of Defense (OSD), the DSN is an interbase, non-secure or secure C2 telecommunications system that provides end-to-end command use and dedicated telephone service, voice-band data, and dial-up Video Teleconferencing (VTC) for C2 and non-C2 DoD authorized users in accordance with national security directives. Non-secure dial-up voice (telephone) service is the system's principal requirement. The DSN system is used only for official business or in the interest of the government and is the first choice for all switched voice and dial-up video telecommunications between DoD user locations. Other systems shall not be used to "BY PASS" DSN unless the Joint Staff provides a waiver. The Joint Staff Policy CJCSI 6215.01B defines DSN performance and features required to ensure end-to-end global voice quality, and interoperability for all voice C2 services. The DSN capability objectives include:

- Survivable service
- Assured connectivity
- Responsive service
- Surge capacity
- Secure service
- Cost-effective service
- Interoperable service
- National Security/Emergency Preparedness (NS/EP) compliant service

1.6.1 DoD C2 Users

Command and Control Users of DoD voice services that include dial-up audio, dial-up Video and dial-up data services are those users that employ command and control as defined in Joint Pub 1-02, 23 March 1994, "Department of Defense Dictionary of Military and Associated Terms"

"The exercise of authority and direction by a properly designated commander over assigned and attached forces in the accomplishment of the mission. Command and control functions are performed through an arrangement of personnel, equipment, communications, facilities, and procedures employed by a commander in planning, directing, coordinating, and controlling forces and operations in the accomplishment of the mission. Also called C2."

These C2 users are involved in originating or receiving the following types of activities in support of DoD missions:

a. Official government business and combat support. Communications (originating or receiving) that require:

- Rapid transmission by telephonic means.
- Expeditious action by called parties and/or furnishing essential information for the conduct of government operations.

b. Combat Support. Crisis and War Communications (originating or receiving) under the following conditions**:**

- Situations that gravely affect the security of national and allied forces.
- Reconstitution of forces in a post-attack period.
- Intelligence essential to national security.
- Conduct of diplomatic negotiations to reduce or limit the threat of war.
- Implementation of federal government actions essential to national survival.
- Situations that gravely affect the internal security of the United States.
- Civil Defense actions concerning US population and disasters or events of extensive seriousness having an immediate and detrimental effect on the welfare of the population.
- Vital information having an immediate effect on aircraft, spacecraft, or missile operations.

c. Command and Control. Crisis and War Communications (originating or receiving) under the following conditions**:**

- Command and control of military forces essential to defense and retaliation.
- Critical intelligence essential to national survival.
- Conduct of diplomatic negotiations critical to the arresting or limiting of hostilities.
- Dissemination of critical civil alert information essential to national survival.
- Continuity of federal government functions essential to national survival.
- Fulfillment of critical US internal security functions essential to national survival.
- Catastrophic events of national or international significance.

d. National Level Command. Crisis and War Communications (originating or receiving) for the following National Level Users:

- The President of the United States, Secretary of Defense, and Joint Chiefs of Staff.
- Commanders of combatant commands when declaring Defense Condition One or Defense Emergency.
- US Comabatant Commanders North American Air Defense (NORAD) when declaring either Defense Condition One or Air Defense Emergency.
- Other national authorities the President may authorize.

e. National Level Collaborative Communications. Originating or receiving for the following National Level Users:

- The President of the United States, Secretary of Defense, and Joint Chiefs of Staff.
- Commanders of combatant commands when declaring Defense Condition One or Defense Emergency.
- Combatant Commanders NORAD when declaring either Defense Condition One or Air Defense Emergency. Other national authorities that the President may authorize in conjunction with Worldwide Secure Voice Conferencing System conferences.

1.6.2 DSN Support to Telephony (Voice, Video, Data) Users

DSN supports three categories of users:

a. **Special C2 Users**. A special class of user who has access to the DSN for essential communications for planning, directing, and controlling operations of assigned forces pursuant to assigned missions. This user requires capabilities that provide crises, preattack, and theater nonnuclear war telecommunications service for intelligence, alert, and strategic readiness. This user also requires communications among the President, Secretary of Defense, Chairman of the Joint Chiefs of Staff, and other members of the Joint Chiefs of Staff, Service Chiefs, and the Combatant Commanders. Specifically, these special C2 users are identified through one or more Joint Staff, Combatant Commanders, Service, or DoD agency validation processes. The following are required capabilities of special C2 users:

(1) Joint Staff-approved FLASH, FLASH OVERRIDE, or IMMEDIATE precedence origination.

(2) Combatant Commanders-validated minimum-essential circuits.

(3) Combatant Commanders or Service-approved IMMEDIATE and PRIORITY precedence origination.

b. **C2 Users**. Users who have a requirement for C2 communications but do not meet the criteria for the class of "special C2 user." C2 users include any person (regardless of the position in the chain-of-command) who issues or receives guidance or orders that direct, control, or coordinate any military forces regardless of the nature of the military mission (including combat support, administration, and logistics), whether said guidance or order is issued or effected during peacetime or wartime. There are three types of C2 users:

(1) Users approved by the Joint Staff, Combatant Commanders, Service, and agency for the PRIORITY and ROUTINE precedence origination.

(2) DoD users having a military mission that might receive C2 calls for orders or direction at precedences above the ROUTINE, even though they do not have a C2 mission for issuing guidance or orders. Therefore, these users must be served by switching facilities that provide the MUFs of the DSN.

(3) Any non-DoD US Government organization supporting Homeland Security that require the Military Unique Services of the DSN and are validated by the Joint Staff.

c. **Non-C2 Users**. DoD, non-DoD, nongovernmental, and foreign government users having no mission or communication requirements to ever originate or receive C2 communications under the existing military scenarios. During a crisis or contingency, they may be denied access to the DSN. Since the DSN is the official DoD switched voice network and the preferred voice communications means, Non-C2 users are provided access to the DSN for the economic benefits of the DoD. It is also the primary means of secure (STU-III/STE family) communications for non-tactical C2 users. DSN must be the user's first choice; however, if DSN is not immediately available, or if the called party does not have access to DSN service, other long-distance calling methods may be used.

1.6.3 DSN Support to C2 Users over the Full Range of Stress Levels

The DSN shall provide end-to-end support to DoD under conditions of a both a regional crisis in one theater and a surge capability to respond to a regional crisis occurring nearly simultaneously in another theater. Support shall be provided over the following Stress Levels in priority order:

(a) Military Operations other than War, Crisis, Terrorist attack, Limited Regional Conflicts, Major Theater War, Preattack, and Theater Nonnuclear War. DSN network capabilities must support all peacetime readiness users, plus surge requirements for terrorist attacks and nonnuclear war. These capabilities are handled according to established precedence.

(b) Post-attack. In the CONUS, DSN possesses the capability to reconstitute itself, from segments of the DSN surviving a terrorist attack, conventional or nuclear war, to support the NCS in reconstituting national communications. Overseas, DSN possesses the same capabilities to support the Theater Combatant Commanders after a terrorist attack, limited regional conflict, major theater conflict, or non-nuclear war.

(c) Peacetime Readiness. DSN supports C2 and non-C2 users.

(d) Early Transattack (few weapons, possible HEMP) or nuclear "Dirty Bomb" terrorist attack. DSN will support C2 user traffic as able.

(e) Massive Nuclear Attack. DSN will support special C2 user traffic as able.

1.6.4 DSN Architecture

The Joint Staff policy 6215.01B defines network performance and features required to ensure end-to-end global voice quality, interoperability for all voice Command and Control (C2) services. The Defense Information Systems Agency (DISA) is responsible for engineering, network design, and technical support. The DSN architecture shown in Figure 1-2 meets the Joint staff policy mandate.

If a telecom switch device is not specifically mentioned in this document (e.g. Remote Line Concentrator Modules, etc.), it shall not be authorized, unless a waiver is received by the ASD (Assistant Secretary of Defense) for Command, Control, Communications, and Intelligence (C3I).

The DSN architecture is a two level network hierarchy consisting of DSN backbone switches and Military/Agency installation Switches. The switches are connected by several types of trunks as shown in Tables 1-1 to 1-3.

Joint Staff policy and subscriber mission requirements determine which location requires the full set of MUFs and capabilities offered by the DSN. The DSN architecture therefore consists of several categories of switches. They may be used as outlined in the paragraphs following Table 1-3.

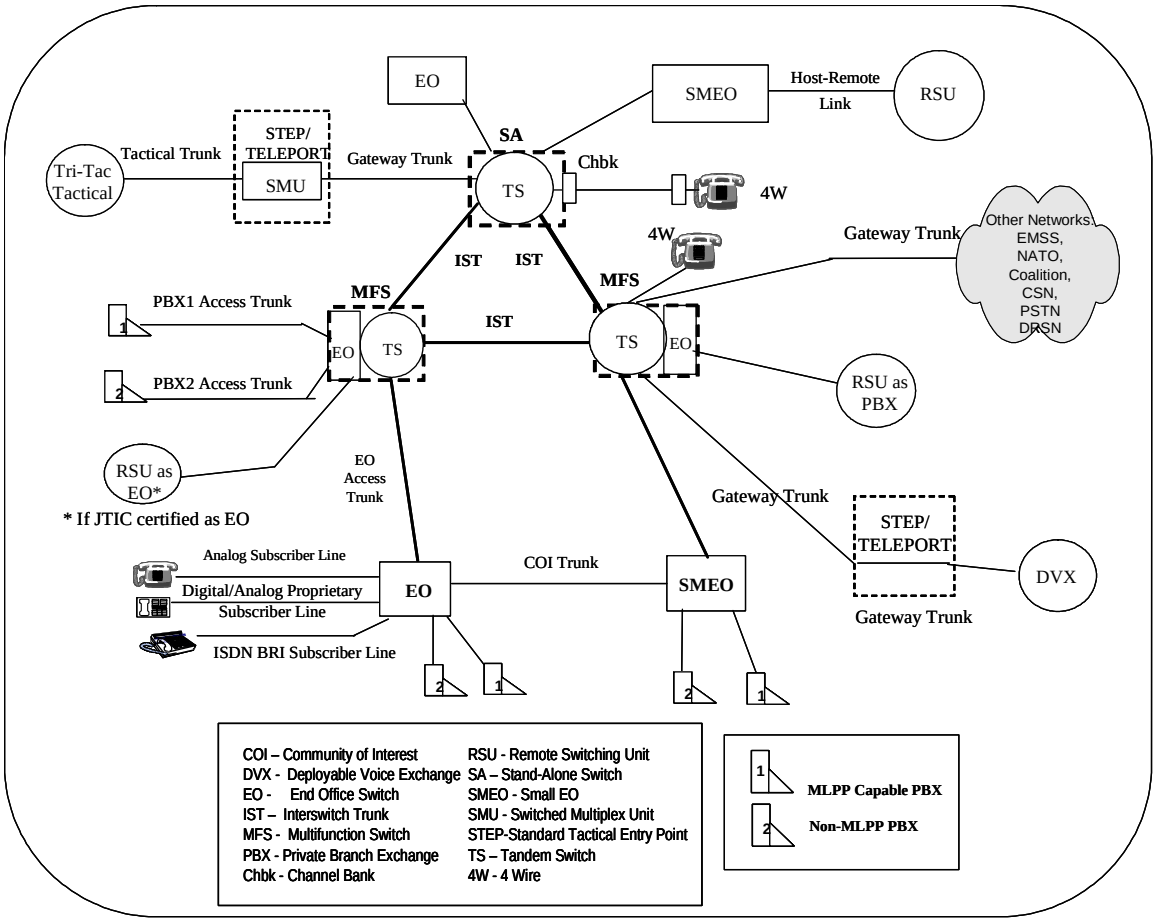

Figure 1-2. DSN Architecture and Components

The interfaces of the DSN architecture is shown in the following tables:

Table 1-1 lists the trunk types and signaling used in the DSN, including legacy interfaces.

Table 1-2 describes the types of subscriber access lines used in the DSN

Table 1-3 summarizes the trunk types required for each DSN Switch type

Table 1-1. Trunk types and signaling used in the DSN (includes legacy interfaces).

Trunk Type	Purpose/Use	Switch-to-Switch Signaling	Electrical Interface
Interswitch Trunk (IST)	Backbone transport TS-to-TS	SS7(ANSI T1.619a,and ITU Q.735.3) CAS MF(R1) 2/6	T1:(B8ZS/ESF, AMI/D4) E1:(HDB3, AMI) OC3
Community of Interest Trunk (COI)	EO/SMEO to EO/SMEO direct traffic only	SS7/PRI(ANSI T1.619a, and ITU Q.955.3,Q.735.3) CAS (MF {R1} 2/6,DP,DTMF)	T1:(B8ZS/ESF, AMI/D4) E1:(HDB3, AMI) OC3, Analog

	only	Analog (E&M)	
EO Access Trunk	EO/SMEO to Tandem Switch	SS7/PRI(ANSI T1.619a, and ITU Q.955.3, Q.735.3), CAS (MF {R1} 2/6,DP,DTMF), Analog (E&M)	T1:(B8ZS/ESF, AMI/D4) E1:(HDB3, AMI) OC3, Analog
Gateway Trunk	DSN to other networks	SS7/PRI (ANSI T1.619a, and ITU Q.955.3, Q.735.3) CAS (MF {R1} 2/6, DP, DTMF) and various host-nation Commercial interfaces	T1:(B8ZS/ESF, AMI/D4) E1:(HDB3, AMI) OC3, Analog
Host Remote (H-R) Link	Remote unit to host umbilical	Proprietary	T1:(B8ZS/ESF, AMI/D4) E1:(HDB3, AMI), OC3
PBX1 Access Trunk (MLPP Capable)	PBX to EO/SMEO Access	SS7/PRI(ANSI T1.619a, and ITU Q.955.3, Q.735.3) CAS (MF {R1} 2/6, DP, DTMF), Analog (E&M)	T1:(B8ZS/ESF, AMI/D4) E1:(HDB3, AMI) OC3, Analog
PBX2 Access (non-MLPP) Trunk	PBX to EO/SMEO Access	One of the following is required as a minimum : Non-MLPP Commercial ISDN PRI, CAS (MF {R1}, MF{R2} 2/6, DP, DTMF), Analog (E&M)	T1:(B8ZS/ESF, AMI/D4) E1:(HDB3, AMI) OC3, Analog
Tactical Trunk	Not Part of DSN	Tri-Tac Unique DTG	CVSD- conditioned diphase

Table 1-2. Subscriber Access Lines Used in the DSN

Type Subscriber Line	Signaling	Electrical Interface
2-wire Analog Subscriber Line	IAW GR-506-CORE. For Precedence see GSCR Table 5-4, 5-5	2-wire analog loop
Digital/Analog Proprietary Subscriber Line	Proprietary	Proprietary
ISDN BRI Subscriber Line	ISDN BRI ANSI T1.619a, NI-1, NI-2, 5ESS Custom, NTI MSL-100, ETSI ITU-T,	ST, U
4-Wire Analog Subscriber Line	DP, DTMF, E&M	4-Wire E&M TypeI, TypeII Type V
ISDN PRI	ISDN PRI, (Commercial, NI-2, 619a, 5ESS custom	T1, E1

Table 1-3. Trunk and Line Types Required By Switch Type

Trunk/Line Type	TS	MFS	EO	SMEO	PBX1	PBX2	DVX
T1 SS7 (T1 619a)	R	R	R				
E1 SS7 (ITU-T Q.735.3 (R=EUROPE ONLY)	R	R	R				
T1 CAS MF R1	R	R	R	C		C[1]	
T1 CAS DTMF	R	R	R	R	C	C[1]	R
T1 CAS DP	R	R	R	R		C[1]	R
E1 CAS MF R1 (R=EUROPE ONLY)	R	R	R	R			R
E1 CAS DTMF (R=EUROPE ONLY)	R	R	R	R			R
E1 CAS DP (R=EUROPE ONLY)	R	R	R	R			R
T1 ISDN PRI (ANSI T1.619a)	R	R	R	R	R		R
ISDN PRI Subscriber NI-2	R	R	R	R	R	C[2]	R
E1 ISDN PRI (ITU-T Q.955.3) (R=EUROPE ONLY)	R	R	R				
2-wire analog Lines		R	R	R	R	C[2]	R
ISDN BRI Subscriber NI-1		R	R	R	R	C[2]	R
ISDN BRI Subscriber NI-2		R	R	R	R	C[2]	R
ISDN-BRI ANSI T1-619a		R	R	R	R		R

C[1] – One of the type is required

C[2] – One of the type is required

1.6.5 DSN Backbone Switches

DSN backbone switches are integral to the DSN (and part of the GIG) which provide tandem switching for long-distance DSN services. The backbone switch types are the tandem switch (TS) and the Multifunction Switch (MFS). These switches have the full set of MUFs as defined in this GSCR. The MFS contains both the EO and TS switch functionalities.

1.6.6 Military/Agency Installation Configuration and Switch Types

Military/Agency installation switch types are integral to the DSN (and part of the GIG) and provide origination and reception of DSN calls to the DSN user categories defined in CJCSI 6215.01B. Because of the various degrees of mission support performed by the users at an installation, the following Military/Agency Installation Switch Types are defined: End Office (EO), Small End Office (SMEO), Private Branch Exchange Type 1 (PBX1), and Private Branch Exchange Type 2 (PBX2). An example installation configuration is shown in Figure 1-2. The intent is to allow for maximum flexibility consistent with satisfying the Combatant Commander's C2 mission requirements.

An installation configuration can vary from a single EO or SMEO with subtending PBXs or RSUs to an installation, which for cost or operations considerations, uses multiple switches such as a mixture of EOs, SMEOs, PBX1s, PBX2s and RSUs, depicted in Figure 1-2, interconnected in a hub, ring, mesh or hybrid configuration (not depicted). When this is done, at least two physically diverse access trunks must be used to connect the EO and SMEO to the DSN tandem backbone. Regardless of where terminated on the installation switches, the Special C2 User, the C2 User, and the Non-C2 User must still be provided the GoS and MUFs required by CJCSI 6215.01B for their class of user.

The network management capabilities required by the GSCR to support Special C2, C2, and Non-C2 Users are still required in all installation switching configurations. It is the responsibility of the installation manager to ensure that the installation configuration meets CJCSI 6215.01B and GSCR requirements. JITC must still certify the end-user to end-user interoperability within the installation and with the DSN tandem backbone. JITC must also certify the network management controls and the security afforded by the installation configuration. Any system, regardless of technology (e.g., Voice Over Internet Protocol-VOIP/Voice Over Asynchronous Transfer Mode (VTOA), that provides end-to-end command use and dedicated telephone service, voice-band data, and dial-up Video Teleconferencing (VTC) for Special C2 User, C2 User, and non-C2 DoD authorized users in accordance with national security directives must be certified by the JITC for its application as one of the DSN office type (TS/MFS/EO/SMEO/PBX1/PBX2) specified in this GSCR. VoIP specific guidance and specifications will be provided in a separate document entitled DSN Voice over Internet Protocol Generic Requirements (DVGR), which is in development.

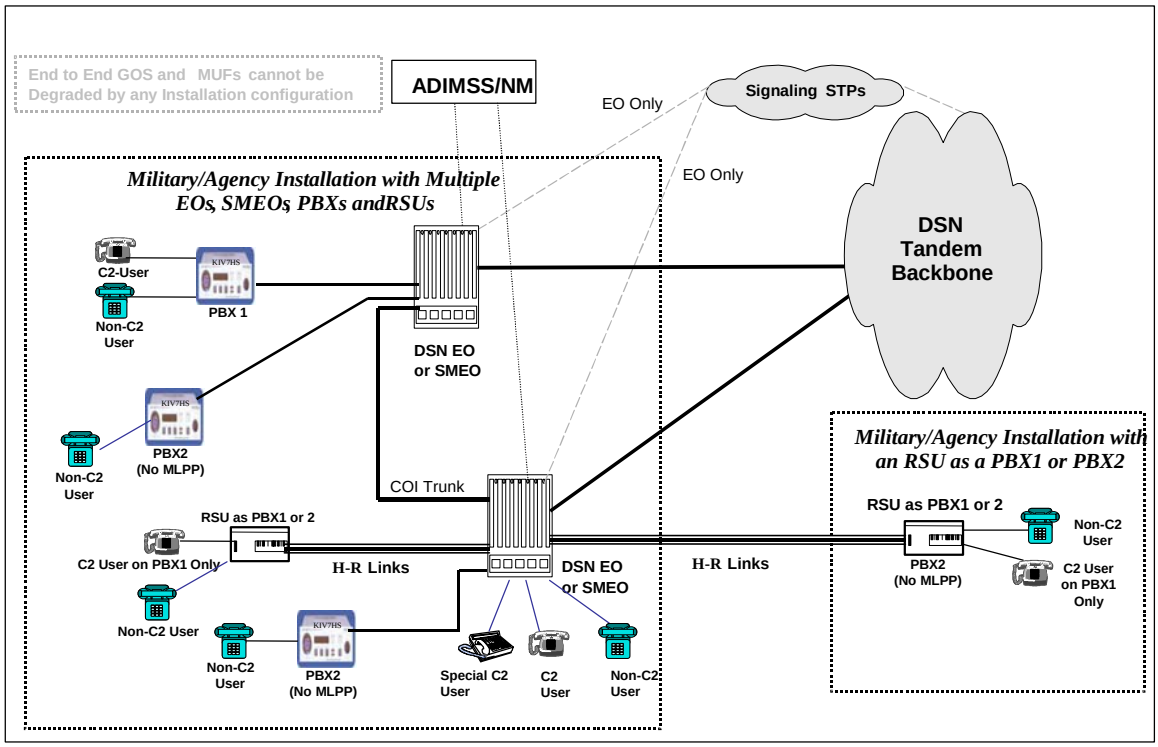

Figure 1-3. Example Installation Configurations

1.6.6.1 End Office

End Offices (EO) are switches integral to the DSN (and part of the GIG) which provide a significant amount of the intra-DoD communications to meet the mission requirements of a Military/Agency installation. An End Office provides access to the long-haul backbone of the DSN by interconnection using EO access trunks. Where an installation's EO function is provided by an MFS, access to the long-haul DSN backbone is provided through the tandem portion of the MFS. A large installation could have multiple end office switches, where each one of them provides a significant amount of DoD communications for the missions of that installation or tenants on the installation. An end office can serve all DSN user categories defined in CJCSI 6215.01B.

1.6.6.2 Small End Office

Small End Offices (SMEOs) are switches integral to the DSN (and part of the GIG) which provide end office functions defined in Paragraph 1.6.6.1 above. The SMEO is used where a smaller DoD community requires DSN C2 services. SMEO technology is based on a commercial Private Automatic Branch Exchange (PABX) with MLPP capabilities, thereby providing a lower-cost end office solution. The SMEO does not provide full DSN Network Traffic Management control capability, offers limited performance reporting, and may not support SS7 signaling.

1.6.6.3 Private Branch Exchange

Private Branch Exchanges (PBXs) are MILDEP-controlled elements of the DSN. They are also part of the GIG because users can originate and receive DSN calls. PBXs are therefore subject to all interoperability requirements of the GIG. There are two categories of DSN PBX switches, Type 1 and Type 2.

a. PBX Type 1. PBX Type 1 has MLPP capabilities. Based on mission requirements, this switch may serve those non-C2 users defined as DoD users having a military mission that might receive C2 calls for orders or direction at precedence levels above ROUTINE, even though they do not have a C2 mission for issuing guidance or orders. Special C2 users are not authorized to be served by a PBX1 and must connect to an EO or SMEO.

b. PBX Type 2. PBX Type 2 has no MLPP capabilities and requires one of the network interface as specified in Table 1-3. This switch can only serve DoD, non-DoD, non-governmental, and foreign government users having no missions or communications requirement to ever originate or receive C2 communications under existing military scenarios. These users are provided access to the DSN for the economic or policy benefits of the DoD, when it is not in conflict with local Public Telephone and Telegraph (PTT) ordinances. During a crisis or contingency, they may be denied access to the DSN. C2 users and Special C2 users are not authorized to be served by a PBX2.

1.6.7 Remote Switching Unit

The Remote Switching Unit (RSU) is a switching function integral to the DSN (and part of the GIG). The RSU may be used to provide different functions: EO/SMEO or PBX. If used as an EO/SMEO the RSU must meet all the requirements of an EO/SMEO when connected to its host switch, and be connected via the host-remote link and the associated host switch to a DSN Backbone SA or MFS. If used as a PBX the RSU must meet all the requirements of a PBX, and be connected via a host remote-link to an installation EO/SMEO. Mission requirements of the users connected to the RSU dictate site-specific application as an EO/SMEO, or PBX. The RSUs will be tested in conjunction with and without the host switch for interoperability certification. Detailed requirements for the RSU are contained in Section 2.10.2.

1.6.8 Deployable Voice Exchange

The Deployable Voice Exchange (DVX) is a government-deployed commercial switch with MLPP capabilities used as a temporary solution during rapid deployment situations. A deployable voice exchange is connected to the DSN using gateway trunks routed through a STEP/Teleport location. Detailed requirements for the DVX are contained in Appendix 2.

SECTION 2 - Capabilities and Features

2.0 Introduction

This section defines GSCR switching system capabilities and features. All features and capabilities listed in this section are not required for all DSN switching systems. The applicability of a particular capability or feature to a type of switch is shown in brackets at the start of each feature description and is summarized in Appendix 1.

2.1 Features Common to Single Users and Business Customers

Features common to residence and business customers are based on features found in Telcordia Technologies GR-520-CORE, *Features Common to Residence and Business,* Issue 1, June 2000.

2.1.1 Individual Line

[Required: EOS, MFS, SMEO, PBX1, PBX2] An individual line is a line arranged to serve only one main station, although additional stations may be connected to the line as extensions of the main station. The system shall be capable of automatically identifying the Directory Number (DN) assigned to a line based on the originating appearance to the system. Service-related features such as manual originating, dial pulse dialing, or DTMF dialing assigned to individual lines may vary from line to line in a switch.

2.1.2 CLASS SM Feature: Selective Call Rejection

[Conditional: EOS, MFS] This feature is conditional because it interacts with MLPP. DSN calls above ROUTINE shall not be rejected if this feature is activated. Procuring agencies specifying this feature shall supply the rejection announcement for their local customers. Selective Call Rejection (SCR) allows customers to block subsequent calls from a calling DN after receiving a harassing call. After receiving an undesired call, the customer dials a code that places the last calling party's DN on a list for rejection. Subsequent calls from the rejected party are intercepted and routed to an announcement. Selective call rejection also enables customers to enter additional DNs onto the list.

If this feature is provided, it shall be in accordance with Telcordia Technologies GR-218-CORE, *CLASS^{SM} Feature: Selective Call Rejection,* Issue 1, June 2000.

2.1.3 Denied Originating Service

[Conditional: EOS, MFS, SMEO, PBX1] This feature is conditional because C2 users could be denied originating service. The feature does not directly interact with MLPP, but operational controls must ensure that C2 users are not denied originating service.

Denied originating is a system feature that provides the capability to selectively deny call originations to individual lines.

If this feature is provided, it shall be in accordance with Telcordia Technologies GR-562-CORE, *Manual Line Features,* Issue 1, June 2000.

2.1.4 Code Restriction and Diversion

[Required: EOS, MFS, SMEO – Conditional: PBX1] Code restriction and diversion destination limitations on calls provide originated at designated lines to specified codes (ie., to include Numbering Plan Area).

2.1.5 Call Waiting Features

2.1.5.1 Call Waiting (CW)

[Conditional: EOS, SMEO, MFS, PBX1] This feature is conditional because it interacts with MLPP. MLPP interaction specifications are found in Section 3 of this GSCR. The switch must provide the DSN precedence call waiting tone.

CW is a feature whereby a line in the talking state is alerted by a call waiting tone when another call is attempting to complete to that line. The call waiting tone is only audible to the line with the CW feature activated. Audible ringing is returned to the originating line. The service also provides a hold feature that is activated by a switchhook flash. Consecutive flashes allow the customer (with the service activated) to alternately talk to the original and the new calling party. If the customer with the service activated hangs up while one party is on hold, the customer with the service activated is automatically rung back, and upon answer is connected to the held party.

If this feature is provided, it shall be in accordance with Telcordia Technologies GR-571-CORE, *Call Waiting,* Issue 1, June 2000.

2.1.5.2 Cancel Call Waiting

[Conditional: EOS, MFS, SMEO, PBX1] This feature is conditional because it is required when call waiting is active. The user must be able to cancel call waiting service. Cancel call waiting is a feature that allows the customer with CW service to inhibit the operation of CW for one call. The customer dials the cancel call waiting code, obtains recall dial tone, and places a call normally. During this call, CW service shall be inactive so that anyone calling the CW customer shall receive the normal busy treatment, and no CW tones shall interrupt the customer's call.

If this feature is provided, it shall be in accordance with Telcordia Technologies GR-572-CORE, *Call Waiting,* Issue 1, June 2000.

2.1.6 Three-Way Calling (TWC)

[Conditional: EOS, MFS, SMEO, PBX1] This feature is conditional because it interacts with MLPP. See Section 3, paragraph 3.8.5 for specific MLPP interaction requirements.

TWC is a feature that allows a station in the talking state to add a third party to the call without operator assistance. To add a third party to the call, the TWC customer flashes the switchhook once

to place the other party on hold, receives recall dial tone, dials the third party's telephone number, and then flashes the switchhook again to establish the TWC connection. The second switchhook flash may occur any time after the completion of dialing. After the TWC connection has been established, the customer with the service activated may disconnect the last party added by a single switchhook flash or depressing a feature key. The customer with the service activated may terminate the TWC call by disconnecting. If either of the other two parties hangs up while the service-activating customer remains off-hook, the TWC is returned to a two-party connection between the remaining parties.

If this feature is provided, it shall be in accordance with Telcordia Technologies GR-577-CORE, *Three-Way Calling,* Issue 1, June 2000.

2.1.7 Add-On Transfer and Conference Calling Features

[Conditional: EOS, MFS, SMEO, PBX1] Add-On Transfer and Conference Calling features are conditional because they interact with MLPP.

The feature set provides the user with the capabilities to handle more than one call at a time on a given line. The capability to hold a call and originate an additional call (Call Hold); the capability to form a three-way conference ((add-on)TWC); the capability to redirect a call to another line (Call Transfer); and the capability to create a larger conference (Conference Calling Six Way Station Controlled) shall be included in this feature.

If this feature is provided, it shall be in accordance with Telcordia Technologies GR-579-CORE, *Add-on Transfer and Conference Calling Features,* Issue 1, June 2000. References to the PSTN in GR-579-CORE are interpreted as the DSN.

2.1.7.1 Call Transfer Individual - All Calls

[Conditional: EOS, MFS, SMEO, PBX1] This feature is conditional because it interacts with MLPP. See Section 3, paragraph 3.8.3 for specific MLPP interaction requirements.

If this feature is provided, it shall be in accordance with Telcordia Technologies GR-579-CORE, *Add-on Transfer and Conference Calling Features,* Issue 1, June 2000.

2.1.7.2 Call Transfer - Internal Only

[Conditional: EOS, MFS, SMEO, PBX1] This feature is conditional because it interacts with MLPP. See Section 3, paragraph 3.8.3 for specific MLPP interaction requirements. This service is a restricted form of the Call Transfer - All Calls feature but does not allow transfer to lines reached via the network.

If this feature is provided, it shall be in accordance with Telcordia Technologies GR-579-CORE, *Add-on Transfer and Conference Calling Features,* Issue 1, June 2000.

2.1.7.3 Call Transfer -Individual - Incoming Only/Add-on Consultation Hold– Incoming Only

[Conditional: EOS, MFS, SMEO, PBX1] This feature is conditional because it interacts with MLPP. See Section 3, paragraph 3.8.3 for specific MLPP interaction requirements. Call Transfer - Individual - Incoming Only/Add-on Consultation Hold – Incoming Only is a version of Call Transfer Individual- All Calls that may be applied only to calls incoming to the Business Group from the network.

If this feature is provided, it shall be in accordance with Telcordia Technologies GR-579-CORE, *Add-on Transfer and Conference Calling Features,* Issue 1, June 2000.

2.1.7.4 Call Transfer – Outside

[Conditional: EOS, MFS, SMEO, PBX1] This feature is conditional because it interacts with MLPP. See Section 3, paragraph 3.8.3 for specific MLPP interaction requirements. Call Transfer-Outside is a version of Call Transfer Individual-All Calls to transfer call to lines reached via the network.

If this feature is provided, it shall be in accordance with Telcordia Technologies GR-579-CORE, *Add-on Transfer and Conference Calling Features,* Issue 1, June 2000.

2.1.7.5 Call Transfer-Add-on to Fully Restricted Station

[Conditional: EOS, MFS, SMEO, PBX1] This feature is conditional because it interacts with MLPP. See Section 3, paragraph 3.8.3 for specific MLPP interaction requirements. Call Transfer– Add-on to a Fully Restricted Station allows consultation with a fully restricted station on a call incoming or outgoing from the Business Group, but it restricts conference and transfer capabilities to situations in which the original call would have been allowed for fully restricted line.

If this feature is provided, it shall be in accordance with Telcordia Technologies GR-579-CORE, *Add-on Transfer and Conference Calling Features,* Issue 1, June 2000.

2.1.7.6 Call Transfer Attendant

[Conditional: EOS, MFS, SMEO, PBX1] This feature is conditional because it interacts with MLPP. See Section 3, paragraph 3.8.3 for specific MLPP interaction requirements. Call Transfer Attendant provides a restricted transfer capability. Only calls incoming to the Business Group from the network may be transferred, and only to the Business Group Attendant. Users can reach the attendant to request the transfer by either flashing, or flashing and dialing 0.

If this feature is provided, it shall be in accordance with Telcordia Technologies GR-579-CORE, *Add-on Transfer and Conference Calling Features,* Issue 1, June 2000.

2.1.7.7 Call Hold

[Conditional: EOS, MFS, SMEO, PBX1] This feature is conditional because it interacts with MLPP. See Section 3, paragraph 3.8.4 for specific MLPP interaction requirements. Call Hold provides the capability for the user to hold a call for an extended period and then return to the call, with or without making another call.

If this feature is provided, it shall be in accordance with Telcordia Technologies GR-579-CORE, *Add-on Transfer and Conference Calling Features,* Issue 1, June 2000.

2.1.7.8 Conference Calling - Six Way Station Controlled

[Conditional: EOS, MFS, SMEO, PBX1] This feature is conditional because it interacts with MLPP. See Section 3, paragraph 3.8.5 for specific MLPP interaction requirements. Conference Calling – Six Way allows the user to establish a conference call involving up to six conferees (including the user). This feature is requested via an Access Code.

If this feature is provided, it shall be in accordance with Telcordia Technologies GR-579-CORE, *Add-on Transfer and Conference Calling Features,* Issue 1, June 2000.

2.1.8 Call Forwarding Features And Call Forwarding Subfeatures

2.1.8.1 Call Forwarding Variable

[Conditional: EOS, MFS, SMEO, PBX1] This feature is conditional because it interacts with MLPP. See Section 3, paragraph 3.8.2.1 for specific MLPP interaction requirements.

With this feature, calls attempting to terminate to a line are redirected to another customer-specified line served by the same office or by another office. The customer activates and deactivates the forwarding function and specifies the desired terminating address during each activation procedure. When activated, calls forwarded while the line is idle cause a short (about 0.5 second) ring on the forwarding line as a reminder that the service is active. The user cannot answer call while this feature is active, but can originate calls.

If this feature is provided, it shall be in accordance with Telcordia Technologies GR-580-CORE, *Call Forwarding Variable,* Issue 1, June 2000.

2.1.8.2 Call Forwarding Busy Line (CFBL)

[Conditional: EOS, MFS, SMEO, PBX1] This feature is conditional because it interacts with MLPP. See Section 3, paragraph 3.8.2.1 for specific MLPP interaction requirements.

CFBL provides the capability to associate with a given line another line to which calls shall be forwarded when the given line is busy. This capability applies to lines within the same business group, within the same switch, or within the network.

If this feature is provided, it shall be in accordance with Telcordia Technologies GR-586-CORE, *Call Forwarding Subfeatures,* Issue 1, June 2000.

2.1.8.3 Call Forwarding - Don't Answer - All Calls

[Conditional: EOS, MFS, SMEO, PBX1] This feature is conditional because it interacts with MLPP. See Section 3, paragraphs 3.8.2.1 & 3.8.2.2 for specific MLPP interaction requirements.

This feature allows calls terminating to an idle station to ring that station a customer-specified number of ringing cycles and, if the call is not answered, to route to another station within the same switching system. If the station to which the call is to be routed is busy, the original station continues to ring until the originator of the call abandons or the call is answered.

If this feature is provided, it shall be in accordance with Telcordia Technologies GR-586-CORE, *Call Forwarding Subfeatures,* Issue 1, June 2000.

2.1.8.4 CLASS^{SM} Feature: Selective Call Forwarding

[Conditional: EOS, MFS, SMEO, PBX1] This feature is conditional because it interacts with MLPP. See Section 3, paragraphs 3.8.2.1 & 3.8.2.2 for specific MLPP interaction requirements.

Selective Call Forwarding (SCF) allows customers to have only calls from selected calling parties forwarded. The SCF customer specifies the callers who are to receive special treatment by including their DNs on a screening list. If a call is placed from a DN on the customer's SCF screening list, the call shall be forwarded to the remote station.

If this feature is provided, it shall be in accordance with Telcordia Technologies GR-217-CORE, *CLASS^{SM} Feature: Selective Call Forwarding,* Issue 1, June 2000.

2.1.9 Call Pick-Up Features

2.1.9.1 Call Pick-Up

[Conditional: EOS, MFS, SMEO, PBX1] This feature is conditional because it interacts with MLPP. See Section 3, paragraph 3.8.6 for specific MLPP interaction requirements.

A station may answer a call that has been terminated to another station in its common call pick-up group in a business group. This is accomplished by dialing a pick-up access code while the called station is being rung. If more than one station in the group is being rung, the station that has been ringing longer shall be picked up first.

If this feature is provided, it shall be in accordance with Telcordia Technologies GR-590-CORE, *Call Pickup Features,* Issue 1, June 2000.

2.1.9.2 Directed Call Pick-Up

[Conditional: EOS, MFS, SMEO, PBX1] This feature is conditional because it interacts with MLPP. See Section 3, paragraph 3.8.6 for specific MLPP interaction requirements.

Directed call pick-up permits a user to dial a code and station number and pick up a call that has been answered or is ringing at another telephone, provided the rung telephone permits dial pick-up. If the other station has answered, a Three Way Call (TWC) is established.

If this feature is provided, it shall be in accordance with Telcordia Technologies GR-590-CORE, *Call Pickup Features,* Issue 1, June 2000.

2.1.9.3 Directed Call Pick-Up without Barge-In

[Conditional: EOS, MFS, SMEO, PBX1] This feature is conditional because it interacts with MLPP. See Section 3, paragraph 3.8.6 for specific MLPP interaction requirements.

This feature is identical to the directed call pick-up feature, except that if the line being picked up has already answered, the party dialing the pick-up code shall be routed to reorder rather than be permitted to barge in on the established connection to create a TWC.

If this feature is provided, it shall be in accordance with Telcordia Technologies GR-590-CORE, *Call Pickup Features,* Issue 1, June 2000.

2.2 Attendant Features

Attendant features in this section apply to attendant consoles that are provided with the local switch and/or centralized attendant services.

2.2.1 Precedence and Preemption

[Required: MFS, EOS – Conditional: SMEO, PBX1] The attendant console shall interoperate with Multi-level precedence and preemption (MLPP) as described in section 3. The console shall be able to initiate all levels of precedence calls (ROUTINE through FLASH-OVERRIDE).

2.2.2 Call Display

[Required: MFS, EOS – Conditional: SMEO, PBX1] The attendant console shall provide a visual display of the calling number, class of service and precedence level for incoming direct dialed calls and diverted calls to the attendant.

2.2.3 Class of Service Override

[Required: MFS, EOS - Conditional: SMEO, PBX1] The attendant shall provide the capability to override any class of service (calling area or precedence) of the calling party on a call-by-call basis.

2.2.4 Busy Override and Busy Verification

[Required: MFS, EOS - Conditional: SMEO, PBX1] The attendant shall have the capability to override a busy line condition. If the called line being verified is busy, off-hook supervision shall be given to the attendant performing the busy verification. When a verification code is used, all digits of the code must be dialed before cut-through to the line can be accomplished. Connections to commercial Central Office access lines shall be restricted from busy verification access. The attendant shall have the capability to enter an existing busy line to inform the user of an incoming call. An override tone shall be provided to the busy line prior to the attendant entering the conversation, and the tone shall be repeated periodically as long as the attendant is connected. Selected stations may be classmarked to deny attendant break-in. In particular, it shall be possible to classmark the lines of selected stations (e.g., all data and secure voice) to preclude the busy verification or busy override being applied to the selected station lines.

2.2.5 Night Service

[Required: MFS, EOS - Conditional: SMEO, PBX1] The attendant console shall have the ability to route all calls normally directed to the console to a night service deflection. The night service deflection shall be a fixed or manually selected directory number.

2.2.6 Automatic Recall of Attendant

[Required: MFS, EOS - Conditional: SMEO, PBX1] When an attendant extends a call to a station that is busy or does not answer within a preset time, the extended party shall be automatically recalled to the console. Recalls shall be transferred to the console that originally processed the call. If that console is busy, the recall shall be placed into the console queue; but if the console is out of service, the recall shall be routed to another console.

2.2.7 Calls in Queue to the Attendant

[Required: MFS, EOS - Conditional: SMEO, PBX1] The attendant console shall have the capability to place calls in a waiting queue. Calls placed in queue to the attendant console shall be retrieved by the attendant in order of precedence level (FLASH-OVERRIDE first, ROUTINE last) and longest holding time. Calls in queue shall not be lost when a console is placed out of service or forwarded to night service deflection. When the console is placed out of service or forwarded to night service while calls are in queue the console shall be capable of one of the following solutions.

1. All calls in queue shall be forwarded to first the centralized attendant, then night service.
   OR

2. All subsequent calls placed to the attendant console shall be forwarded to first the centralized attendant, and then night service. The attendant console shall be able to answer all remaining calls in queue preventing any calls from being lost.

2.2.8 Release to Pivot for Operator Services.

[Required: MFS, EOS - Conditional: SMEO, PBX1] This capability shall conform to SR-2275 Telcordia Notes on the Networks Issue 4 Signaling October 2000 and FSD 30-33-0000 Release To Pivot Network Capability. Release To Pivot (RTP) Network Capability is a network routing capability that consists of a collection of call setup procedures that provides flexibility to an TS, MFS, EO type switch to determine conditions for either forwarding a call or releasing it back to a previous switch in the call path. RTP is a network capability that is invoked in support of service or business needs, and not directly by an end user. The Release to Pivot network capability permits an operator services switch, once it has determined a new destination for the call, to have the connection established from the originating switch. The basic capability allows any switch to indicate to switches farther forward in the call path that it has the ability to pivot the call. An application that determines the new destination for the call (in this case, the operator services switch) can then release the call with a Redirection Number parameter containing the address of the new destination. The Pivot switch (in this case, the originating switch) will not terminate the call on receipt of the Release message, but will pass the call forward toward the new destination. The result is that the Release switch (which determined the new destination) saves an incoming and an outgoing trunk relative to the case where the call is forwarded to the new destination. Basic Release to Pivot uses the SS7 to perform the following:

- Redirect Capability parameter to indicate support for the capability
- Redirect Counter parameter to prevent looping of a call among a set of switches invoking the capability
- Release Cause value 23 to indicate Release to Pivot caused the Release. (Other values are also allowed.)

Additional SS7 parameters have been defined to allow future expansion of the useof Release to Pivot by operator services, including:

- Redirect Status parameter to allow the operator system to acknowledge receipt of the offer to perform Release to Pivot from the originating switch.
- Redirect Forward Information parameter to carry additional information in the forward direction.
- Redirect Backward Information parameter to carry additional information in the backward direction.

2.3 Customer Access Interfaces

2.3.1 PBX Line

[Required: MFS, EOS - Conditional: SMEO, PBX1] This interface is conditional because it is not required for all DSN switches and recognizes that PBXs may be interfaced with DSN switches

using other interfaces. Each MILDEP acquisition agent is responsible for specifying the type of PBX interfaces required at the base, camp, post, station, or facility location.

A PBX line (PBX-Stored Program Controlled Switching System [SPCS] line) is a line appearance at the local switching system that permits connection to a customer premise switching system. The connecting facility may be 1- or 2-way and it may be loop start or ground start. A PBX line is like an individual line except for ringback, power cross test, and permanent signal treatment.

If this feature is provided, it shall be in accordance with Telcordia Technologies GR-524-CORE, *PBX Line*, Issue 1, FSD 04-01-0000, June 2000.

2.3.2 Direct Inward Dialing (DID)

[Required: MFS, EOS - Conditional: SMEO, PBX1] This interface is conditional because it is not required for all DSN switches and recognizes that PBXs may be interfaced with DSN switches using other interfaces. Each MILDEP acquisition agent is responsible for specifying the type of PBX interfaces required at the base, camp, post, station, or facility location.

DID is a feature that allows an incoming call to reach a specific PBX station line without attendant assistance. With DID, the switch seizes a DID trunk and outpulses the station line number to the PBX. If the called station's line is idle and not restricted from receiving terminating calls, the PBX alerts the called station and returns audible ringing on the incoming connection. If the called station's line is busy, the PBX returns busy tone. If the called station is restricted from receiving terminating calls, the PBX routes the incoming call to an announcement, reorder tone, or to the attendant.

If this feature is provided, it shall be in accordance with Telcordia Technologies GR-524-CORE, *PBX Line*, Issue 1, FSD 04-02-0000, June 2000.

2.3.3 National ISDN 1/2 Basic Access

[Required: EOS, MFS, SMEO, PBX1 - Conditional: PBX2] The switch shall include both S/T and U interfaces for ISDN Basic Access. The ISDN Basic Access interface allows the simultaneous transmission of voice, circuit-switched data, and packet data over a single customer line connecting CPE and a digital switch. Specifically, the ISDN Basic Access allows the provision of two 64-kbps B channels, which may be used to carry voice, circuit-switched data, or packet data, and a 16-kbps D channel, which can carry signaling and packet information.

Requirements for this feature shall be in accordance with Telcordia Technologies references SR-NWT-002120 Issue 1 May 1992 with revision 1, June 1993, SR-NWT-002343, and TR-NWT-001268 Issue 1 December 1991.

2.3.4 National ISDN 1/2 Primary Access.

[Required: TS, EOS, MFS, SMEO, PABX1 - Conditional: PBX2] The ISDN Primary Access interface is an ISDN user-network interface in which the interface structure is composed of multiple B-channels and one D-channel. The bit rate of the D-channel in this structure is 64 kbps. When a 1544-kbps primary rate interface is provided, the interface structure is 23B+ D.

Requirements for this feature shall be in accordance with Telcordia Technologies references SR-NWT-002120 Issue 1 May 1992 with revision 1, June 1993, SR-NWT-002343, and TR-NWT-001268 Issue 1 December 1991.

2.3.5 Analog Line

[Required: EOS, MFS, SMEO, PBX1 - Conditional: PBX2] This interface is required for all DSN switches.

Requirements for this feature shall be in accordance with Telcordia Technologies GR-510-CORE, *System Interfaces,* Issue 1, June 2000.

2.4 Public Safety Features

2.4.1 Basic Emergency Service (911)

[Conditional: EOS, MFS, SMEO, PBX1, PBX2] The basic 911 emergency service feature provides a 3-digit universal telephone number (911) that gives the public direct access to an emergency service bureau, usually without charge to the calling subscriber. The emergency service is one-way only, terminating to the service bureau. The emergency service bureau is usually located within a police department, although in some communities it is located in a fire department or in an independent agency serving as a communications center. A given local switching system shall serve no more than one emergency service bureau. When the originating line and the emergency service bureau are served by the same switching system, the bureau has the capability of holding and disconnecting the connection and monitoring the supervisory state, and ringing the originating station back. When the local switching system is in an area with expanded emergency service (E911) served through a tandem switch, the emergency call is advanced to the tandem switch with calling line Automatic Number Identification (ANI).

If this feature is provided, it shall be in accordance with Telcordia Technologies GR-529-CORE, *Public Safety,* Issue 1, June 2000.

2.4.2 Tracing of Terminating Calls.

[Required: EOS, MFS, SMEO – Conditional: PBX1] This feature identifies the calling number on intraoffice calls or the incoming trunk on incoming calls for calls terminating to a specified DN. When this feature is activated, the originating DN or incoming trunk number, terminating DN, and the time and date are printed out for each call to the specified line.

Requirements for this feature shall be in accordance with Telcordia Technologies GR-529-CORE, *Public Safety*, Issue 1, June 2000, FSD 15-03-0000.

2.4.3 Outgoing Call Tracing.

[Required: EOS, MFS, SMEO – Conditional: PBX1] This feature allows the tracing of nuisance calls to a specified DN suspected of originating from a given local office. The tracing is activated when the specified DN is entered. A printout of the originating DN, outgoing trunk number, or terminating number, and the time and date, are generated for every call to the specified DN.

Requirements for this feature shall be in accordance with Telcordia Technologies GR-529-CORE, *Public Safety*, Issue 1, June 2000, FSD 15-03-0000.

2.4.4 Tandem Call Trace.

[Required: EOS, MFS, SMEO, TS] This feature identifies the incoming trunk of a tandem call to a specified office DN. The feature is activated by entering the specified distant office DN for a tandem call trace. A printout of the incoming trunk number and terminating DN, and the time and date, is generated for every call to the specified DN.

Requirements for this feature shall be in accordance with Telcordia Technologies GR-529-CORE, *Public Safety*, Issue 1, June 2000, FSD 15-03-0000.

2.4.5 Trace of A Call in Progress.

[Required: TS, EOS, MFS, SMEO] This feature identifies the originating DN or incoming trunk for a call in progress. The feature is activated by authorized personnel entering a request that includes the specific terminating DN or trunk involved in the call.

Requirements for this feature shall be in accordance with Telcordia Technologies GR-529-CORE, *Public Safety*, Issue 1, June 2000, FSD 15-03-0000.

2.5 Trunk, Line, and Special Service Circuit Service Test Features

The majority of the capabilities listed in this section do not have a Feature Service Description (FSD) in the LSSGR. These capabilities are definitions only in Section 2 of the LSSGR. However, the capabilities may be provided on a local basis to enhance assured services.

2.5.1 Local Office Test Lines

Test lines shall be provided for testing lines and incoming trunks from connecting offices. The transmission test lines listed in the following text may also be used for tandem applications.

2.5.1.1 100-Type Test Line

[Required: TS, EOS, MFS – Conditional: SMEO] A 100-type test line provides a local office with equipment that first applies a precise (1004 Hz at 1 mW) tone for a timed period, then a

balanced termination for transmission level and noise measurements. Line and trunk access shall be provided to the 100-type test line.

2.5.1.2 101-Type Test Line

[Required: TS, EOS, MFS – Conditional: SMEO] A 101-type test line provides a communication line to a craftsperson's position.

2.5.1.3 102-Type Test Line

[Required: TS, EOS, MFS – Conditional: SMEO] A 102-type test line applies a precise (1004 Hz at 1 mW) tone for approximately 9 seconds on, 1 second off, in a repetitive sequence.

2.5.1.4 105-Type Test Line

[Required: TS, EOS, MFS – Conditional: SMEO] A 105-type test line, with responder, provides for automatic two-way loss and noise measurements, plus gain slope, return loss, and noise in the presence of tone-on trunks requiring transmission testing.

2.5.1.5 Synchronous Test Line

[Required: TS, EOS, MFS – Conditional: SMEO] A synchronous test line provides diagnostic tests of incoming trunk equipment. A total of six supervisory pulses are returned.

2.5.1.6 Non-synchronous Test Line

[Required: TS, EOS, MFS – Conditional: SMEO] A nonsynchronous test line tests incoming trunk equipment. Supervisory pulses are repeated until disconnection takes place.

2.5.1.7 Permanent Busy Test Line

[Required: TS, EOS, MFS – Conditional: SMEO] A permanent busy test line shall return a permanent busy signal.

2.5.1.8 108-Type Test Line

[Required: TS, EOS, MFS – Conditional: SMEO] A 108-type test line provides a non-inverting loopback for digital testing between digital exchanges and/or digital PBXs. The test line accepts and loops back received octets that are retransmitted so that the positions of the bits within the octets are preserved. All digital services (e. g., 56 kbps, 64 kbps restricted, and 64 kbps clear) can pass digital test signals over this test line.

2.5.2 Outside Plant Test Lines

2.5.2.1 Dialable Cable Pair Locator Tone

[Conditional: EOS, SMEO, MFS] The Dialable Cable Pair Locator Tone is a feature designed to give the field technician the capability via a secured dial-up access to apply identification tone to a single subscriber loop. This eliminates the involvement of the mainframe personnel in applying the identification tone on working subscriber lines.

If this feature is provided, it shall be in accordance with Telcordia Technologies GR-533-CORE, *Database Services Service Switching Points*, Issue 1, June 2000.

2.5.2.2 DTMF Station Test Circuit

[Required: EOS, MFS – Conditional: SMEO] This circuit provides the capability for an installer (or a customer assisted by test desk personnel) to test the station ringer and directory number line assignment in the Central Office. It shall also be possible to test DTMF stations including 12-button sets and repertory dialers.

2.5.3 Test Incoming Trunks in Tandem or Local State

[Conditional: TS, EOS, SMEO, MFS] The system shall provide the ability to place incoming trunks in the local or tandem state on incoming calls to 100-, 102-, and 105-type test lines. The choice of state shall be based on the DN received from the originating office.

2.5.4 Manual Testing

2.5.4.1 Manual Test of Line

[Required: EOS, MFS – Conditional: SMEO, PBX1] This feature provides a craftsperson at a Trunk Line Workstation (TLWS), or at another local test position interfacing with the switching system, with line maintenance capabilities such as: removing lines from service, restoring lines to service, verifying the status of lines, and accessing lines for basic test capabilities (resistance, leakage and current measurements, and ringing.

2.5.4.2 Manual Test of Trunks

[Required: TS, EOS, SMEO, MFS] This feature provides a craftsperson at a TLWS, or at another local test position interfacing with the switching system, with trunk maintenance capabilities such as: removing trunks from service, restoring trunks to service, verifying trunk states, and accessing trunks for basic test capabilities (resistance, leakage and current measurements, supervisory tests, and Voice Frequency [VF] parameter measurements).

2.5.5 Trunk Group - Remove from Service (Make Busy)

[Required: TS, EOS, SMEO, MFS – Conditional: PBX1] On request from the local test position, the system shall place all idle (not traffic busy) trunks in a specified trunk group in the out-of-service locked out manual or out-of-service disabled manual state requested. Traffic busy trunks are camped-on, and as they become idle, are also placed in the requested state.

2.5.6 Trunk Group - Restore to Service (Make Idle)

[Required: TS, EOS, SMEO, MFS – Conditional: PBX1] On request from the local test position, the system shall provide the ability to restore to service in the idle state all trunks in a specified trunk group that were removed from service by use of the Remove from Service (make-busy) feature.

2.5.7 Carrier Group Alarm (CGA)

[Required: TS, EOS, SMEO, MFS] The system shall provide the capability of detecting a CGA. When this alarm is detected, all associated outgoing trunks shall automatically be made busy to subsequent customer call attempts. Call attempts on associated incoming trunks shall not be processed. When possible, the reverse make busy feature shall be exercised on incoming trunks.

2.5.7.1 Software Carrier Group Alarm

[Conditional: TS, EOS, SMEO, MFS] This feature is conditional because all switch manufactures may not provide this feature. This feature allows the local switching system to infer the failure of a carrier group from observed call failures on only a few trunks in the trunk group.

2.6 Preset Conferencing

[Required: TS, EOS, MFS - Conditional: SMEO, PBX1] Preset conferencing may be implemented via an external conference bridge. DSN TS, EOS and MFS systems shall be able to support conference bridges and the following preset conference requirements.

- Ten (10) separate bridges with each bridge having the capacity for one originator and twenty (20) conferees.

- Each bridge shall have the capability to function as the "Primary" or "Secondary" or "Alternate" bridge that will interconnects to other bridges that supports up to a maximum of one hundred ninety-one (191) conferees using all ten bridges off the same switch for the same conference.

- Preset Conference (abbreviated pool of subscribers/bridges) assignment of abbreviated numbers shall not be greater than twenty (20) switch address numbers per bridge. Such address numbers could be a combination of subscriber lines and other conference bridge access.

- Preset conference network(s) that require more than twenty conferees shall use the cascading bridge method of expanding the number of conferees beyond twenty conferees.

- Each preset conference bridge shall be fully capable of multi-level precedence and preemption access and control. If such a bridge is external then such a bridge must be fully interoperable with the serving switch to permit full MLPP access and control.

Access to preset conference equipment shall be by means of one or more KXX codes assigned solely for this use. A preset conference shall be established as follows:

a. The originating office shall screen the unique KXX office code, and precedence level to protect against unauthorized preset conference usage, and, where authorized, attempt the connection, either locally or by way of ISTs. The KXX conference codes shall be translated as vacant codes on 10-digit calls.
b. The originator of a preset conference shall key the digits KXX-XXXX. This address may be preceded by:
   (1) A route code for choice of data-grade or voice-grade circuits, in the form 1X-KXX-XXXX.
   (2) Access digit and precedence digit for precedence level treatment, in the form 9P-KXX-XXXX, where P is any digit 0-4.
   (3) Both the route code and precedence level in the form of 9P-1X-KXX-XXXX.
c. Translation of the 7-digit address shall determine routing to the appropriate switching center to obtain conferencing equipment.
d. At the appropriate switching center, the received address shall be translated to determine the conference group and the desired list of conferee addresses.

e. The number assignments shall be made in accordance with the DSN numbering plan, DISAC 310-255-1.
f. If a called conferee's telephone is not answered, automatic disconnect is to take place within an adjustable interval of 15 to 60 seconds after a bridge leg is first connected to the conferee line.
g. Originators of preset conferences shall have the capability of adding up to five non-programmed conferees(within the 21 conferees capability) to the conference by sequentially keying each add-on address and connecting the conferee to the bridge, by hook flashing, dialing the potential conference and then hook flashing again when the next conferee answers.

2.6.1 Conference Notification Recorded Announcement

[Required: TS, MFS, EOS - Conditional: SMEO, PBX1] When the conference equipment receives the first off-hook supervisory signal from an answering conferee, conference notification recording shall be applied, and shall continue as an audible announcement to answering conferees and to the originator until all conferees answer. The conference notification recording shall automatically be removed 2 seconds after the last conferee answers, indicating, by such removal, that the conferees have all answered and that the conference is ready to begin. The originator shall have the ability to remove the conference notification recording and force the conference via line or trunk by depressing the "A" or "#" key on a Dual Tone Multi-Frequency (DTMF) instrument or a programmed feature key on ISDN or digital instruments. Forcing the conference, prematurely, shall not interfere with attempts to complete the connections to unanswered conferees, or to add-on new conferees.

Where access to secondary and tertiary bridges are necessary in a conference, arrangements shall be made so that the conference notification recordings applied at each bridge are not superimposed.

a. Each bridge shall generate a notification recording that is audible only to those conferees on that bridge.
b. When all conferees on a bridge have answered, the conference notification recording shall be removed automatically from that bridge 2 seconds after the last conferee answers.
c. When the conference notification recording is removed automatically from a bridge, the notification recording from the adjacent bridge, if still continuing, shall then become audible to the originator and to the conferees on the remaining bridge(s).
d. When a conferee disconnects, a conference disconnect tone as described in table 5-5 shall be sent to originator and other conferees in the conference.

2.6.2 Automatic Retrial and Alternate Address

[Required: TS, MFS, EOS - Conditional: SMEO, PBX1] Off-hook supervision shall be returned to the originator from each bridge when all conferees have answered or when the originator has forced the conference prior to all conferees answering. If answer supervision is not returned from any conferee location, within an adjustable interval of 15 to 60 seconds, one automatic retrial shall be made to the primary conferee address.

a. Conferees may be provided with alternate addresses that the switch shall try when the call fails to complete to the primary address.

b. If a call to a primary address fails to complete within two trials, the call shall be directed to an alternate address, if provided, and two call attempts shall be made to the alternate address.

2.6.3 Bridge Release

[Required: TS, MFS, EOS - Conditional: SMEO, PBX1] The releasing of primary, secondary, and tertiary bridges shall occur as follows:

a. The primary bridge shall be released when on-hook supervision is received on the originating port of the primary bridge or on all of the other conference bridge ports.
b. If on-hook supervision is received on the originating port of secondary or tertiary bridges, all subsequent connections and equipment shall be released.
c. A conference bridge shall be released after all attempts at call completion are made and no answers are received on all ports.
d. Release of conference bridges shall be such that it shall be impossible for the bridges to become locked together.

2.6.4 Lost Connection to Conferee or Originator

[Required: TS, MFS, EOS - Conditional: SMEO, PBX1] If a connection to a conferee is lost, due to disconnection or preemption, a distinctive disconnect signal, defined as a conference disconnect tone, shall be provided to the conference originator and all conferees. If the originator is lost or preempted, the bridge shall be held up long enough for a preempt tone to be given to all conferees. (See table 5-5)

2.6.5 Secondary Conferencing

[Required: TS, MFS, EOS - Conditional: SMEO, PBX1] The switch shall provide the capability of secondary conferencing, which is the ability to interconnect conference bridges located at separate DSN switches.

a. When a conference is activated and two or more of the addressees require a secondary bridge, the address shall be processed in the normal manner and directed toward the office serving the secondary equipment.
b. The conference equipment shall be designed so that it may be used alternatively for primary or secondary conferences.
c. Identical operational features, such as application and removal of the conference notification recorded announcement, shall be provided for both primary and secondary conferences.

2.7 Address Translation

[Required: TS, EOS, MFS - Conditional: SMEO, PBX1] Translation of the 7-digit conference address shall be as follows:

a. The switch shall have the capability to translate three digits of the switch code.

b. The first two digits of the four-digit line number may be utilized to identify the switching center at which conferencing equipment is located.

The four-digit line number shall be translated to indicate the particular preset conference arrangement.

2.8 Nailed-Up Connections

[Required: TS, EOS, MFS, - Conditional: SMEO, PBX1] Nailed-up connections are intended for special use, providing a permanently established path through a switch for either a network circuit (trunk) or a special service facility. The DSN switching system shall provide the following functionality for nailed-up connections:

a. DSN switches shall provide the capability of establishing nail-up connections through the switch.

b. It shall be possible to establish a nailed-up connection between any two like (ie., Pulse Code Modulation (PCM) on line type) terminations on a DSN switch.

c. The nailed-up connections shall be capable of providing a direct interface to PCM transmission facilities terminating directly on the DSN switch at the standard PCM-24 DS1 level of 1.544 Mb/s and the PCM-30 level of 2.048 Mb/s supporting both Channel Associated Signaling (CAS) and Common Channel Signaling (CCS).

d. Supervision received at one side of the nailed-up connection shall be repeated at the other end. This applies to analog-to-digital and digital-to-digital connections.

e. All nailed-up connections through the switch shall be monitored by the normal maintenance routines to ensure proper operating paths through the switch. In the event that a PCM switching network fault affects a nailed-up connection, the system shall automatically reconfigure the connection around the fault.

f. The DSN switch shall be capable of “nailing-up” at least 10 percent of the switch’s circuits.

g. Nailed-up connections shall not be pre-emptable.

2.9 Assured Dial Tone

[Required: TS, EOS, MFS, SMEO - Conditional: PBX1] CJCSI 6215.01B mandates non-blocking service for FLASH and FLASH OVERRIDE users. In order to meet this requirement FLASH and FLASH OVERRIDE users shall receive dial tone at all times. The switch shall provide assured dial tone on a minimum of 3 percent of all station lines.

Requirements for this feature shall be in accordance with Telcordia Technologies GR-512-CORE, *Reliability,* Issue 2, January 1998, Section 12.

2.10 DSN Remote Switch Unit (RSU) Requirements

2.10.1 Introduction

The DSN RSU is a telecommunications switch that is connected to and dependent upon a host switch (EOS, MFS, or SMEO) for some or all centralized operations, administrative and maintenance capabilities. The RSU is connected to the host switch by an umbilical line/trunk and must be implemented IAW Figure 1-2 DSN Architecture and Components. An RSU used on-premise with its Host switch can be designated as on-premise PBX switch. The umbilical line/trunk is usually based on PCM-24 (T1) or PCM-30 (E1) transmission but is proprietary to each switch manufacturer. The requirements for a DSN RSU are as follows.

2.10.2 Normal Operating Condition – Connected To The Host

Normal operating condition is defined as when the umbilical line/trunk is fully connected to the host switch and neither the host nor the RSU is in a degraded condition (as described in 2.10.3). During normal operating conditions the RSU shall provide the same user features as an EOS, SMEO, or PBX depending on how it is being used in the network. This means that the RSU must provide full DSN service as well as local intra-RSU service. The RSU in normal operating conditions shall meet the normal operating condition requirements of FSD 30-23-0000, Issue 1, June 2000, which is a module of GR-532-CORE.

If used as End Office, a remote switching unit in the normal mode must provide physical diverse routing to its associated host switch and have direct trunking to the local commercial telephone network.

2.10.3 Degraded Operating Conditions

There are two degraded conditions that are described in GR-532-CORE Section 3.7.3. These conditions are: (1) Stand-Alone, when the host link unbilical has been severed; and (2) Partial Stand-Alone, when the host link umbilical is saturated with traffic or the host link is partially “out-of-service”.

2.10.3.1 Stand-Alone Condition

When the umbilical links between the host and the RSU are completely severed, the requirements of FSD 30-23-0000, Issue 1, June 2000, which is a module of GR-532-CORE, for standalone operation shall apply, with the exception that the collection of Automated Message Accounting (AMA) data is not required.

Furthermore, MLPP functionality is required, unless Joint Staff validates that the C2 Users behind or on that switch do not require MLPP in stand-alone mode.

2.10.3.2 Partial Stand-Alone Condition

The RSU requirements when the umbilical links to the host switch are saturated are:

1. The RSU shall provide the requirements for Partial Standalone defined in GR-532-CORE, FSD 30-23-0000, Issue 1, June 2000.
2. Three percent (3%) of the user lines and umbilical line/trunk capacity shall be able to provide assured dial tone as defined in Paragraph 2.9.
3. Normal MLPP functionality, in accordance with Section 3, shall be provided via the umbilical lines/trunks.

2.11 Control of Precedence Calls

[Conditional: MFS] The Precedence Access Threshold (PAT) mechanism feature is described below and may be provided in order to control the number of simultaneously outgoing calls for each precedence level and calling area entering the DSN. All access lines shall be capable of being classmarked for/not for PAT screening.

2.11.1 Precedence Access Threshold (PAT)

[Conditional: MFS] The software controlled PAT mechanism which shall limit the number of simultaneous calls originated by selected user stations, interswitch trunk groups, attendant consoles and other designated switch termination's whose traffic input to the DSN requires screening. The PAT mechanisms shall allow termination of each application, (e.g. user station, attendant positions, or special switch interfaces to users/networks) whose traffic needs to be screened. The switch shall provide a minimum of seven (7) PAT mechanisms. Each PAT mechanism shall accommodate any number of the switch's terminations and any combination of those terminations. The switch shall be equipped, through classmarks, to assign any PAT mechanism to any switch termination or conversely, any switch termination to any PAT mechanism. It shall be possible to classmark any switch termination as subject to PAT mechanism restrictions or not subject to PAT mechanism restrictions.

2.11.1.1 Call Screening

[Conditional: MFS] Outgoing calls shall be screened by classmark prior to being presented to the appropriate PAT mechanism. The classmark screening shall determine whether or not the outgoing call shall be presented to the PAT mechanism based on a comparison of the dialed address with the calling user's class of service privileges including precedence, calling area, route code, zone restriction, and Community of Interest (COI) classmarks. Outgoing calls which successfully pass all tests shall be presented to the appropriate PAT mechanism. Calls which fail one or more of the tests shall be rejected and given the proper signal and/or announcement.

2.11.1.2 Functional Structure

[Conditional: MFS]

a. Each PAT mechanism shall functionally consist of a set of Precedence Level/Calling Area (PL/CA) thresholds, a summation-of-thresholds count, and a total-calls-in-progress counter. The total-calls-in-progress counter shall count all calls in progress that were permitted by the PAT mechanism. The summation-of-thresholds count shall register the sum of all threshold levels associated with the PAT mechanism. The PL/CA thresholds place limits on the number of simultaneous calls allowed of a given combination of precedence level and calling area. There shall be five (5) precedence levels (ROUTINE, PRIORITY, IMMEDIATE, FLASH, FLASH OVERRIDE) and five (5) progressively wider calling areas (A1, A2, A3, A4, A5) established. Each PAT mechanism shall have twenty-five (25) PL/CA thresholds. Associated with each of these precedence level and calling area combinations shall be a threshold setting and a calls-in-progress counter that registers the current count of the calls in progress for that precedence level/calling area combination. Each PAT mechanism shall functionally consist of the following elements:

1. A set of 25 PL/CA thresholds

2. A set of 25 calls-in-progress counters. Each calls-in-progress counter is associated with a PL/CA threshold

3. A summation-of-thresholds count

4. A total calls in progress counter

b. The calls-in-progress counter associated with a PL/CA threshold registers the number of calls in progress for that PL/CA combination.

c. The summation-of-thresholds count shall register the sum of the number of simultaneous calls allowed for each PL/CA combinations. This corresponds to summing the PL/CA thresholds.

d. The total-calls-in-progress counter shall register the total number of calls in progress that were permitted by the PAT mechanism

2.11.1.3 Simultaneous Calls Limitation

[Conditional: MFS] Each PAT mechanism shall set the limit on the number of simultaneous calls permitted at each precedence level and calling area combination, subject to permissible overflow conditions specified in Section 2.11.1.4. The simultaneous calls limitation process shall be as follows:

1. A call which is presented to the PAT mechanism shall initially be tested against the PL/CA threshold which has the same precedence level and calling area of the call. The call will be permitted if the threshold setting for that PL/CA is greater than the calls in progress count for that PL/CA. If the call is permitted, the calls-in-progress count for that PL/CA and the total-calls-in-progress counter shall be incremented.

2. If the threshold setting is equal to or less than the calls in progress count for that PL/CA, the call will be tested against the overflow process.

2.11.1.4 Overflow Process

[Conditional: MFS]

a. The functional objective of the overflow process is for calls of lower precedence level and narrower calling area to utilize unused calling capacity of higher precedence level and equal and wider calling area and equal precedence level and wider calling area call types without blocking calls of higher precedence level and wider calling area. The general rule for the overflow process shall be that if a call has not been permitted by initial simultaneous-calls-limitation testing, as specified in Section 2.11.1.3, the call will be permitted if the three following conditions are met:

1. The sum of the threshold settings of the PL/CAs with equal and higher precedence levels and equal and wider calling areas than the call is greater than the sum of the calls-in-progress counts of the PL/CAs with equal and higher precedence levels and equal and wider calling areas than the call; and

2. The summation-of-thresholds count is greater than the total-calls-in-progress count.

3. The PAT algorithm shall never allow any F/FO call to be blocked, dropped, delayed, discarded, suppressed or otherwise mutilated and interfered with in favor of calls of lesser precedence.

b. When a call is permitted due to the overflow procedure, it shall increment the calls-in-progress counter of the PL/CA that has the same precedence level and calling area combination of the call. This entry will be in excess of the quantity permitted by Section 2.11.1.3. It shall also increment the total-calls-in-progress counter.

2.11.1.5 Decrementing the Calls-In-Progress Count

[Conditional: MFS] The appropriate calls-in-progress counter for the PL/CA assignment of the call and the total-calls-in-progress counter shall be decremented when any of the following occur:

1. A call permitted by the PAT mechanism is unable to find an idle or preemptable outgoing trunk during the routing process.

2. A call permitted by the PAT mechanism is preempted or is discontinued for any reason.

2.11.1.6 Call Treatment

[Conditional: MFS]

a. Calls which are permitted DSN access shall search the appropriate DSN trunk groups for idle or preemptable trunks in accordance with normal routing procedures.

b. ROUTINE precedence calls which are denied DSN access by a PAT mechanism shall be provided 120 Impulses per Minute (IPM) busy tone.

c. PRIORITY or higher precedence calls which are denied DSN access by a PAT mechanism shall be provided the Precedence Access Limitation (PALA) recorded announcement (Table 3-1).

2.11.1.7 Queuing

[Conditional: MFS] The switch shall be equipped to provide queuing for the PAT mechanism on both an off-hook and on-hook basis.

1. When off-hook queing is activated, calls shall be held in queue for a minimum of thirty (30) seconds per interval. The holding time shall be programmable and composed of a minimum of five (5) intervals.

2. When on-hook queuing is activated, calls shall be held in queue for a minimum of five (5) minutes per interval. The holding time shall be programmable and composed of a minimum of five (5) intervals. Automatic call-back to the caller shall be initiated after both the PAT mechanism outlet and the needed trunk are available.

3. The switch shall be equipped to permit enabling and disabling either off-hook or on-hook queuing for each PAT mechanism on a local or remote basis.

2.11.1.8 Attendant Calls

[Conditional: MFS] The attendant shall be allowed to upgrade the precedence level and calling area of any call on a per call basis only. After the higher precedence level and calling area has been authorized by the attendant, the call shall be routed through the PAT prior to accessing the DSN. The Call Detail Recording function shall record the escalated precedence level and calling area granted by the attendant. This requirement will insure proper charges for service received.

2.11.1.9 Operational Measurement Registers

[Conditional: MFS] Three operational measurement registers shall be associated with each PL/CA threshold. The first register shall be a peg count of the number of calls offered to the PAT mechanism logic at that precedence level/calling area combination. The second register shall record the number of calls not permitted by the PAT mechanism at that precedence level/calling area threshold combination. The third register shall record the number of calls successfully processed through the PAT mechanism at that precedence level/calling area combination which fail to find an idle or preemptable outgoing trunk.

2.11.1.10 Maintenance and Administration of Thresholds

[Conditional: MFS] Each switch shall be able to establish and change precedence level and calling area threshold settings and calling area restrictions of each PAT mechanism by administrative commands and shall not require switch down time to accomplish. A software log shall be maintained of any changes to the threshold levels for a period of ninety (90) days. An entry shall be automatically made in the log whenever a threshold level or group of threshold levels is changed. Each entry shall record the date and time the threshold levels were changed, the identity of the terminal from which the change was made (with user ID), the threshold levels resulting from the change and identification of personnel that made the change. The Government shall be provided access to these software logs upon request.

2.12 DSN Hotline Service

[Required: MFS, EOS, SMEO] DSN Hotline service shall not be allowed to use the following services:

- Hold (line terminator denied to put call on “HOLD”)
- Three-Way Calling
- Normal Call Transfer
- Electronic Key Telephone System (EKTS)
- Ad-hoc Conferencing

DSN Hotline service shall allow the user to automatically initiate a voice or circuit mode data call to a previously designated user by initiating a service request and/or to act as a receiver for Hotline originated calls and/or calls from designated parties on a screening list. Hotline service shall allow normal analog and digital (ISDN and non-ISDN) users to place calls by either going off-hook or call setup request without providing, in the call setup request, the called party information required by the network to route the call. Instead, the information for the destination call party setup is stored in the network by prior subscription. The service shall also allow terminating restrictions to be provided to ensure that certain voice and/or circuit mode data Hotline subscribers only receive calls from other specified users. The Hotline service shall be provided on a subscription basis to specific users and may be withdrawn for administrative reasons or at the request of the subscriber.

The Hotline subscriber with the originating Hotline option shall invoke the service by sending a normal call setup request to the network but without destination information. The network shall use the subscribed information (Precedence level with voice and/or circuit mode data) to process the call and establish it according to the normal network procedures. The network shall also indicate and retain that the call is a Hotline originated call with the subscribed precedence and voice and/or circuit mode data.

At the called user with a Terminating Restriction option, the restriction portion of the service shall be invoked whenever a terminating call is received by the network of the called user.

If the called user is subscribed to the Terminating Restriction by list option only, the network searches the screening list for the calling user's number. If the calling user's number is provided and found on the screening list, the network shall complete the call. If the calling user's number is not provided or if the provided number is not found on the screening list, the network shall block the call, provide the appropriate intercept treatment, and log the attempt.

2.12.1 Protected Hotline Calling

[Required: MFS, EOS, SMEO] In addition to the protection provided by the use of the route code, the user may receive Hotline calls only from a specified list of parties and may originate calls to a specified destination only, called the Designated Called Party (DCP).

2.12.2 Pair Protected Hotline Calling

[Required: MFS, EOS, SMEO] In addition to the protection provided by the use of the route code, each of the two designated users can only call each other and no third party can call either.

2.12.3 Unprotected Hotline Receiving

[Required: MFS, EOS, SMEO] The user may originate calls to a specified destination only (i.e., the DCP) but may receive calls from any party including the DCP.

2.12.4 Protected Hotline Receiving

[Required: MFS, EOS, SMEO] In addition to the protection provided by the use of the route code, the user may receive calls only from a list of parties but may originate calls to any party.

2.12.5 User Interoperability

[Required: MFS, EOS, SMEO] ISDN Hotline shall be interoperable with analog, digital, and other BRI lines using the DSN Worldwide Dialing and Numbering Plan (WWDNP) "route code" identifier of "*5" for voice and "*6" for circuit mode data calls.(* The user does not dial these route codes.) The switch shall automatically dial hotline calls when an off-hook condition occurs and out pulse the appropriate route digit (i.e. 5 or 6). Refer to table 4-8.

2.13 Measurements and Data Generation

This section contains the Measurements and data generation requirements that shall be collected by DSN switching systems. The measurements and data collected are used to maintain, manage, and engineer the DSN.

2.13.1 Common Data Requirements

2.13.1.1 Data Quality

[Required: TS, MFS, EOS, SMEO] DSN switching systems shall meet the data quality and data presentation requirements in Telcordia Technologies Generic Requirements, GR-478-CORE, Issue 4, February 2000, Section 2, paragraphs 2.3 and 2.4. The SMEO is not required to meet the 30 second and 5 minute Traffic Data Reporting Requirements in GR-478-CORE, paragraph 2.4.1, Table 2-1. However, SMEOs shall meet the 15 or 30 or 60 minute, and daily reporting requirements.

2.13.2 Circuit Switched Network Measurements

2.13.2.1 Basic Switch Performance

DSN switching systems shall meet the following switch performance requirements in Telcordia Technologies Generic Requirements, GR-478-CORE, Issue 4, February 2000, Section 3.1.

2.13.2.1.1 Traffic Measurements

[Required: TS, MFS, EOS - Conditional: SMEO] DSN switching systems shall meet the traffic measurement requirements in Telcordia Technologies Generic Requirements, GR-478-CORE, Issue 4, February 2000, Section 3, Paragraph 3.1.1.

2.13.2.1.2 Reference Data

[Required: TS, MFS, EOS - Conditional: SMEO] DSN switching systems shall meet the reference data objective requirements in Telcordia Technologies Generic Requirements, GR-478-CORE, Issue 4, February 2000, Section 3, Paragraph 3.1.3.

2.13.2.2 Line Servicing

[Required: TS, MFS, EOS – Conditional: SMEO] DSN switching systems shall meet the line servicing requirements in Telcordia Technologies Generic Requirements, GR-478-CORE, Issue 4, February 2000, Section 3.2.

2.13.2.3 Trunk Groups

[Required: TS, MFS, EOS - Conditional: SMEO] DSN switching systems shall meet the trunk group requirements in Telcordia Technologies Generic Requirements, GR-478-CORE, Issue 4, February 2000, Section 3.3.

2.13.2.4 Call Processor

[Required: TS, MFS, EOS - Conditional: SMEO] DSN switching systems shall meet the call processor requirements in Telcordia Technologies Generic Requirements, GR-478-CORE, Issue 4, February 2000, Section 3.4.

2.13.2.5 Switch Services

[Required: TS, MFS, EOS - Conditional: SMEO] DSN switching systems shall meet the switch service requirements in Telcordia Technologies Generic Requirements, GR-478-CORE, Issue 4, February 2000, Section 3.5.

2.13.2.6 Special Studies

[Required: TS, MFS, EOS - Conditional: SMEO] DSN switching systems shall meet the special studies requirements in Telcordia Technologies Generic Requirements, GR-478-CORE, Issue 4, February 2000, Section 3.6. Requirements referring to ISDN are optional for SMEO switches.

2.13.2.7 Remote Switching Site

[Conditional: MFS, EOS, SMEO] DSN switching systems which support remote switching sites shall meet the remote switching site traffic and reference data requirements in Telcordia Technologies Generic Requirements, GR-478-CORE, Issue 4, February 2000, Section 3.7, paragraphs 3.7.1 and 3.7.2.

2.13.2.8 Features

[Conditional: MFS, EOS, SMEO] DSN switches shall meet the traffic data requirements for features. Descriptions of the requirements are found in Telcordia Technologies Generic Requirements, GR-478-CORE, Issue 4, February 2000, Section 3.10.

2.13.3 Common Channel Signaling Network (CCSN) Measurements

[Required: TS, EOS, MFS - Conditional: SMEO] DSN switching systems shall meet the CCSN measurement requirements in Telcordia Technologies Generic Requirements, GR-478-CORE, Issue 4, February 2000, Section 4.

2.13.4 ISDN Measurements

[Required: TS, MFS, EOS, SMEO] DSN switching systems providing ISDN services shall meet the ISDN measurement requirements in Telcordia Technologies Generic Requirements, GR-478-CORE, Issue 4, February 2000, Section 6.

2.13.5 Traffic Capacity

[Required: MFS, TS, EOS, SMEO] Requirements for Traffic Capacity shall be in accordance with Telcordia Technologies GR-517-CORE, Issue 1, December 1998, *Traffic Capacity and Environment*

SECTION 3 – Multi-Level Precedence and Preemption (MLPP)

3.0 Introduction

This section covers the MLPP requirements for DSN switching systems. It discusses precedence levels, cause values, preemption in the network, interface requirements for MLPP with ISDN, and MLPP interactions with other features and services. No feature or function specifically identified in this GSCR or in the referenced standards shall prevent the completion or connection of a PRIORITY or higher precedence call in accordance with this section.

3.1 Multi-Level Precedence and Preemption (MLPP) Overview

3.1.1 Description

[Required: TS, EOS, MFS, SMEO, PBX1] The MLPP service applies to the MLPP service domain only. Connections and resources that belong to a call from an MLPP subscriber shall be marked with a precedence level and domain identifier (Refer to sections 3.7 & 3.9) and shall only be preempted by calls of higher precedence from MLPP users in the same MLPP service domain. The maximum precedence level of a subscriber is set at the subscription time by the DSN network administrator based on the subscriber's validated need. The subscriber may select a precedence level up to and including the maximum authorized precedence level on a per call basis.

Precedence provides preferred handling of MLPP service requests. It involves assigning and validating priority levels to calls and prioritized treatment of MLPP service requests.

Precedence calls (PRIORITY and above) that are not responded to by the called party (e.g., call unanswered) shall be diverted in accordance with section 3.3. If precedence call waiting has been invoked, these calls shall be handled in accordance with section 3.8.1. Unanswered calls placed at a ROUTINE precedence level shall continue to ring.

Preemption may take one of two forms. First, the called party may be busy with a lower precedence call which must be preempted in favor of completing the higher precedence call from the calling party. Second, the network resources may be busy with calls some of which are of lower precedence than the call requested by the calling party. One or more of these lower precedence calls shall be preempted to complete the higher precedence call. There are four characteristics of preemption:

a. Any party whose connection was terminated (whether that resource is reused or not) shall receive a distinctive preemption notification (see Section 5, Paragraph 5.5, Table 5-5);

b. Any called party of an active call that is being preempted by a higher precedence call shall be required to acknowledge the preemption by going on-hook, before being connected to the new calling party;

c. When there are no idle resources, preemption of the lowest of these lower level precedence resources shall occur;

d. A call can be preempted any time after the precedence level of the call has been established and before call clearing has begun.

3.1.2 Precedence Levels

[Required: TS, EOS, MFS, SMEO, PBX1] The switch shall provide five precedence levels. The precedence levels listed from lowest to highest are: ROUTINE, PRIORITY, IMMEDIATE, FLASH, and FLASH OVERRIDE.

3.1.3 Announcements

[Required: TS, EOS, SMEO, MFS, PBX1] Precedence Access Limitation Announcement (PALA) is conditional for all switches and Attendant Queue Announcement (ATQA) is required for MFS and EOS. With the exception of PALA and ATQA, the announcements in Table 3-1 are required for all DSN Switches and all announcements that are associated with specific Network Management Trunk Group and/or Code control implemented. Each message shall contain a location identification number to be provided by the Government. The switching system shall be identified by “Switch Name and Location.”. Announcements shall be capable of being recorded and changed by maintenance and operations personnel without the use of vendor proprietary passwords or proprietary equipment and software.

Table 3-1. Announcements

Announcement Condition	Announcement
An equal or higher precedence call is in progress	Blocked Precedence Announcement (BPA). "(Switch name and Location). Equal or higher precedence calls have prevented completion of you call. Please hang up and try again. This is a recording. (Switch name and Location)."
Unauthorized Precedence level is attempted	Unauthorized Precedence Level Announcement (UPA). "(Switch name and Location). The precedence used is not authorized for your line. Please use an authorized precedence or ask your attendant for assistance. This is a recording. (Switch name and Location)."
No such service or Vacant Code	Vacant Code Announcement (VCA). "Switch name and Location. Your call cannot be completed as dialed. Please consult your directory and call again or ask your operator for assistance. This is a recording. (Switch name and Location)."
Operating or equipment problems encountered.	Isolated Code Announcement (ICA). "(Switch name and Location). A service disruption has prevented the completion of your call. Please wait 30 minutes and try again. In case of emergency call your operator. This is a recording. (Switch name and Location)."
Precedence Access Threshold limitation	Precedence Access Limitation Announcement (PALA). "(Switch name and Location). Precedence access limitation has prevented the completion of your call. Please hang up and try again. This is a recording. (Switch name and Location)."
Busy station not equipped for preemption	Busy Not Equipped Announcement (BNEA). "(Switch name and Location). The number you have dialed is busy and not equipped for call waiting or preemption. Please hang up and try again. This is a recording. (Switch name and Location)."
Attendant Queue Announcement (ATQA)	"This is the <site name> [multifunction, end office] switch. All attendants are busy now. Please remain on the line until an attendant becomes available or try your call later. This is a recording. <site name> [multifunction, end office] switch."

3.1.4 Invocation and Operation.

[Required: TS, EOS, MFS, SMEO, PBX1] The precedence level of a call is selected by the subscriber on a per call basis. The subscriber may select any precedence level up to and including his maximum authorized precedence level. The network at the subscriber's originating interface ensures that the selected precedence level does not exceed the maximum level assigned to that number. Once set for a call, this precedence level cannot be changed nor shall a connection between two DSN subscribers have different precedence levels.

A call will automatically default to ROUTINE unless a higher precedence is dialed. The DSN worldwide numbering and dialing plan is specified in Section 4, Paragraphs 4.5.1, 4.5.3, and 4.5.4.

During a call setup, if there is a shortage of network resources, then the switch shall determine if resources are held by calls of lower precedence. The switch can then release the lowest of these lower precedence call(s) and seize the resources required to set up the higher precedence call. These resources include interoffice circuits, intraoffice circuits, lines, conference bridges, and circuit switched data circuits.

The preemption operation depends on whether the switch needs to preempt a common network facility, such as an interswitch trunk that is currently being used by a different subscriber than the intended called subscriber or whether it needs to preempt a channel on the user access of the called subscriber.

If a called user access line is to be preempted, both the called party and its connected-to-parties shall be, at a minimum, audibly notified of the preemption using the preemption tone in Section 5, Table 5-5, and the existing MLPP call shall be immediately cleared. The called party must acknowledge the preemption by going on-hook or pressing a feature button, before the higher precedence call is completed. The called party is then offered the new MLPP call.

After attempting a precedence call, the calling party shall receive an audible ringback precedence call tone when the call is successfully offered to the called party as a precedence call. These alerting tones are provided in Section 5, Table 5-5.

The calling party shall receive a blocked precedence announcement (BPA), as shown in Table 3-1, for the following reasons:

a. equal or higher precedence calls have prevented completion;

b. there are no idle network resources to make a connection to the dialed number and the called subscriber belongs to a network that does not support preemption.

The calling party shall receive an unauthorized precedence announcement (UPA), as shown in Table 3-1, if the requested precedence level is not subscribed to.

The calling party shall receive a busy not equipped announcement (BNEA), as shown in Table 3-1, if the called party is assigned as non-preemptable.

Precedence calls (PRIORITY and above) that are not responded to by the called party (e.g., call unanswered) shall be diverted in accordance with section 3.3. If precedence call waiting has been

invoked, these calls shall be handled in accordance with section 3.8.1. Unanswered calls placed at a ROUTINE precedence level shall continue to ring.

3.2 Preemption in the Network

[Required: TS, EOS, SMEO, MFS, PBX1] The following treatment at the called party's interface for precedence calls applies to both analog and digital (ISDN and non-ISDN) terminating lines.

3.2.1 Network Facilities Active With Lower Precedence Calls

[Required: TS, EOS, SMEO, MFS, PBX1] For Priority calls and above, during call setup, if there is a shortage of a network resource, then the network shall determine if resources are held by calls of lower precedence. The network shall release the lowest of these lower precedence call(s) and seize the necessary resources that are required to setup the higher precedence call. These resources include interoffice circuits, channels, conference bridges, and circuit-switched data circuits.

When a common network facility is preempted, all existing parties shall receive a preemption tone (see Section 5, Table 5-5) and the existing connection is disconnected. The new higher precedence call is then setup using the preempted facility.

3.2.1.1 CANCEL to (CANT) / CANCEL from (CANF)

[Required: TS, EOS, MFS - Conditional: SMEO] Requirements for this feature shall be in accordance with Telcordia Technologies GR-477-CORE, *Network Traffic Management,* Issue 4, Feb. 2000, Section 6.

In addition, FLASH and FLASH OVERRIDE calls shall be exempted from these controls. The application of any trunk group (TG) control shall not prevent precedence calls from performing a preemptive search on all of the TG's that were previously friendly searched.

3.2.2 Network Facilities Active With Equal or Higher Precedence Call

[Required: TS, EOS, SMEO, MFS, PBX1] If all network facilities required to complete a precedence call are busy with equal or higher precedence calls, the calling user shall be sent the blocked precedence announcement. (see Table 3-1)

3.2.3 MLPP Trunk Selection (Hunting).

[Required: TS, EOS, SMEO, MFS] DSN route selections shall be based on precedence level and calling area classmarks for both voice-grade and data-grade trunk groups. The DSN hunting sequence shall be capable of being varied depending on the route. Hunt sequences shall be capable of scanning data-grade trunk groups for voice-grade calls. The hunting sequence shall be capable

of searching all trunks. The hunting sequence shall first examine the route digit so that, for data calls only, data-grade trunks shall be searched. For voice-grade calls, all trunks shall be searched.

3.2.3.1 Hunt Sequence for Trunks

[Required: TS, EOS, SMEO, MFS] The switches shall route DSN calls to trunks that have classmarks to indicate the precedence level and calling area (PL/CA). Calls shall not be originated over trunks that are classmarked at a PL/CA authorization lower than that used to register the call.

3.2.3.1.1 ROUTINE Calls

[Required: TS, EOS, SMEO, MFS] For ROUTINE calls, the switch shall employ an idle search on all programmed routes to the call destination. Failing to find an idle trunk, the switch shall provide a trunk busy tone to the caller.

3.2.3.1.2 Precedence Calls Above ROUTINE

[Required: TS, EOS, SMEO, MFS] The switch shall provide for two methods of trunk route selection for precedence calls above ROUTINE. Either method can be assigned to a destination route based on the DSN KXX and/or KXX code of the call. In each method, trunks shall be individually tested for idle or busy conditions. If preemption is required, only a call of the lowest level of precedence, lower than the dialed precedence, shall be preempted.

3.2.3.1.2.1 Method 1

[Required: TS, EOS, SMEO, MFS] In method 1, as shown in Figure 3-1A, the switch shall first perform an idle search on the direct route and all alternative routes. Failing to find an idle trunk, the switch shall enter the preemptive search. In the preemptive search, the switch shall again search for an idle trunk in the direct route, and if so, shall select any idle trunk found. If no idle trunk exists in the direct route, the switch shall preempt the call of the lowest precedence in the direct route, provided the precedence of the call selected for preemption is lower than the precedence of the call being processed. Failing to complete the call on the direct route, the switch shall advance the preemptive search to the next alternate route, and repeat the preemptive search process described above. This process will continue through all possible alternate routes. When the switch is unable to preempt, it shall route the caller to the Blocked Precedence Announcement (BPA).

3.2.3.1.2.2 Method 2

[Required: TS, MFS - Conditional: EOS, SMEO] In method 2, as shown in Figure 3-1B, the switch shall directly enter a friendly then a preemptive search of the direct route before searching the next alternate route choice. In the preemptive search, the switch shall search for an idle trunk in the direct route, and if so, shall select any idle trunk found. If no idle trunk exists in the direct route, the switch shall preempt the call of the lowest precedence in the direct route, provided the precedence of the call selected for preemption is lower than the precedence of the call being processed. Failing to complete the call on the direct route, the switch shall advance the preemptive search to the next alternate route, and repeat the preemptive search process described above. This

process will continue through all possible alternate routes. When the switch is unable to preempt, it shall route the caller to the Blocked Precedence Announcement (BPA).

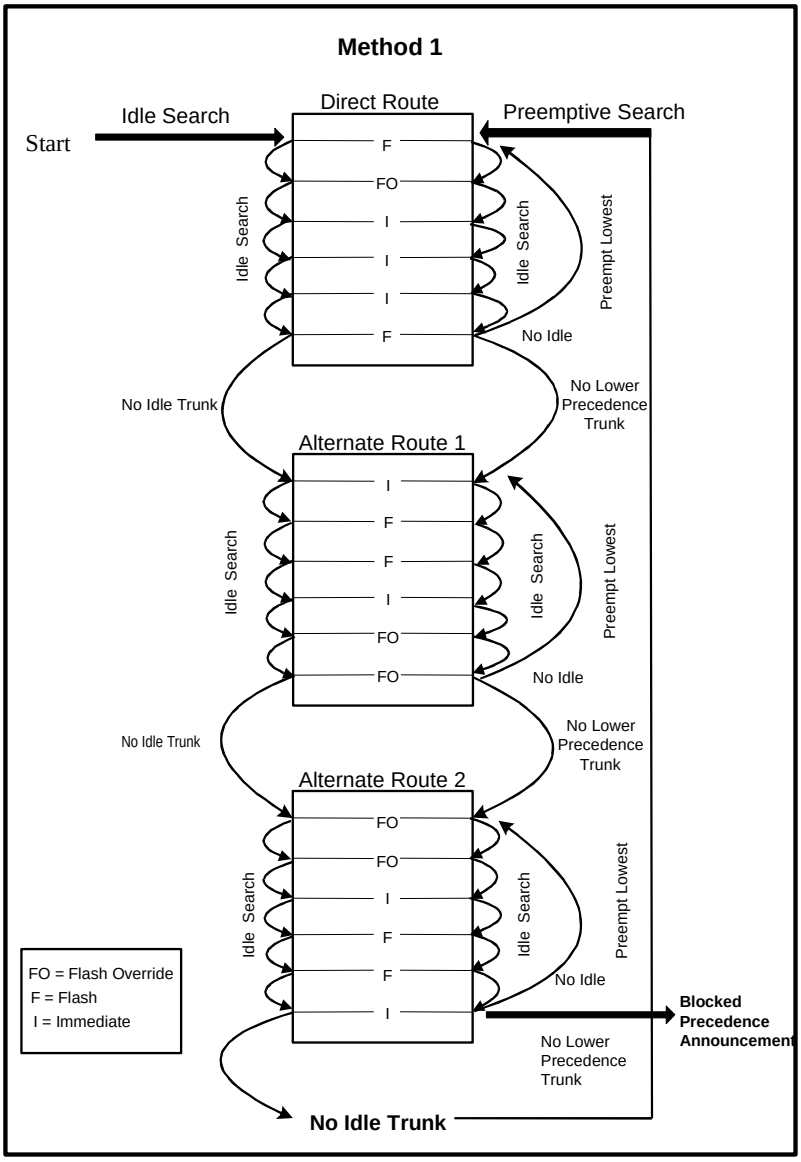

Figure 3-1A. Example Hunt Sequence for Method 1

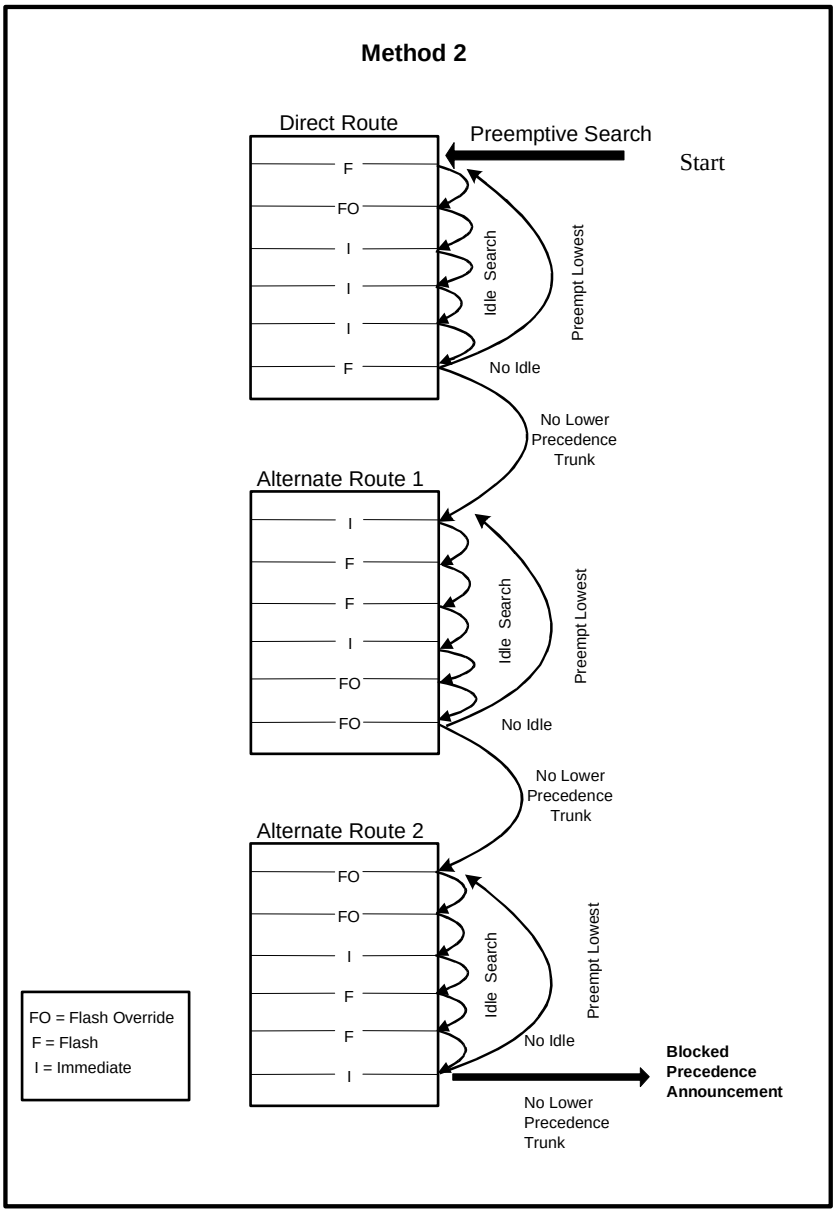

Figure 3-1B. Example Hunt Sequence for Method 2

3.2.4 MLPP Interworking with Other Networks

3.2.4.1 Calls From non-MLPP Networks

[Required: TS, EOS, SMEO, MFS] Calls from non-MLPP networks that enter the DSN shall be assigned the lowest precedence level and the DSN MLPP service domain identification at the network boundary and may be preempted within the DSN.

3.2.4.2 Precedence Calls to Non-MLPP Networks

[Required: TS, EOS, SMEO, MFS] When a precedence call leaves the DSN and enters a network that does not support the MLPP service, the call is treated as an non-MLPP call and does not cause preemption. A network that does not support the MLPP service is required, if technically possible within the existing system, to convey the parameters of the MLPP service (e.g., precedence level, domain, etc.) intact. In this case, the network shall pass them on with no action taken. In other words, the network shall not act on these parameters and pass them on transparently.

3.3 Precedence Call Diversion

[Required: MFS, EOS SMEO, PBX1] The switch shall provide a global default diversion of all unanswered calls above routine to a designated Directory Number (DN) (e.g. Attendant Console), after a specified period of time, selectable 15-45 seconds and before the Voice Mail and ACD system diversion. Calls above “ROUTINE” precedence destined to directory numbers that are configured with voice mail or ACD systems shall only divert as specified above. “ROUTINE” precedence calls destined to directory numbers that are configured with voice mail or ACD systems are allowed and shall be configurable to divert after the global default diversion timer interval.

Precedence calls above ROUTINE shall not be forwarded to Voice Mail.

Incoming DSN precedence calls to the attendant's listed directory number and incoming calls diverted to an attendant shall signal the attendant by a distinctive visual signal indicating the precedence level and shall be placed in queue. Call distribution shall be accomplished to reduce excessive waiting times. Each attendant position shall operate from common queue(s). Incoming calls shall be queued for attendant service by precedence and time of arrival. The highest precedence with the longest holding time call shall be answered first. A recorded message of explanation (Attendant Queue Announcement) shall be automatically applied to the waiting calls. (Refer to table 3-1)

3.4 Preempt Signaling

3.4.1 Channel Associated Signaling (CAS)

[Required: TS, EOS, SMEO, MFS - Conditional: PBX1] Preemption on Channel Associated Signaling (CAS) trunks is accomplished at a DSN switch by sending a measured supervisory signal toward both the calling and called user lines of an established or ringing call connection. The supervisory signal is recognized at each DSN switch, causing disconnect of any intermediate trunk circuits. Following intermediate circuit release, preempt warning tone of 440 + 620 Hz is applied to each end-user line or PBX access line circuit. The preempt warning tone is introduced by the terminating DSN switch at a composite level of -16 dBm, measured at the zero Transmission Level Point (TLP). The preempt warning tone is maintained until a disconnect signal is returned to the switch. The trunk and/or line which was selected for preemption for reuse is now reused to serve the waiting precedence call. Four preemption signals exist, depending upon the circuit condition and intended disposition and are illustrated in Figure 3-2 and described in Table 3-2. Preemption for reuse can only be exercised on classmarked trunks or access lines in a preemptable group. Preemption not for reuse may occur on any classmarked trunk or access line when another link in the established connection is preempted for reuse. DSN switches shall apply preempt warning tone to Dial Pulse and Dual Tone Multi-Frequency access lines amd access trunks that do not use “Wink Start” signaling for supervision. Trunks that use Wink Start supervision must conform to the preempt signals as shown in Figure 3-2. Access lines and trunks using common channel supervision (i.e. D channel signaling) shall apply the preempt warning tone to the user that is preempted. Switches that support MF (R1) signaling shall be capable of interpreting and responding to the four preempt signals as shown in Figure 3-2.

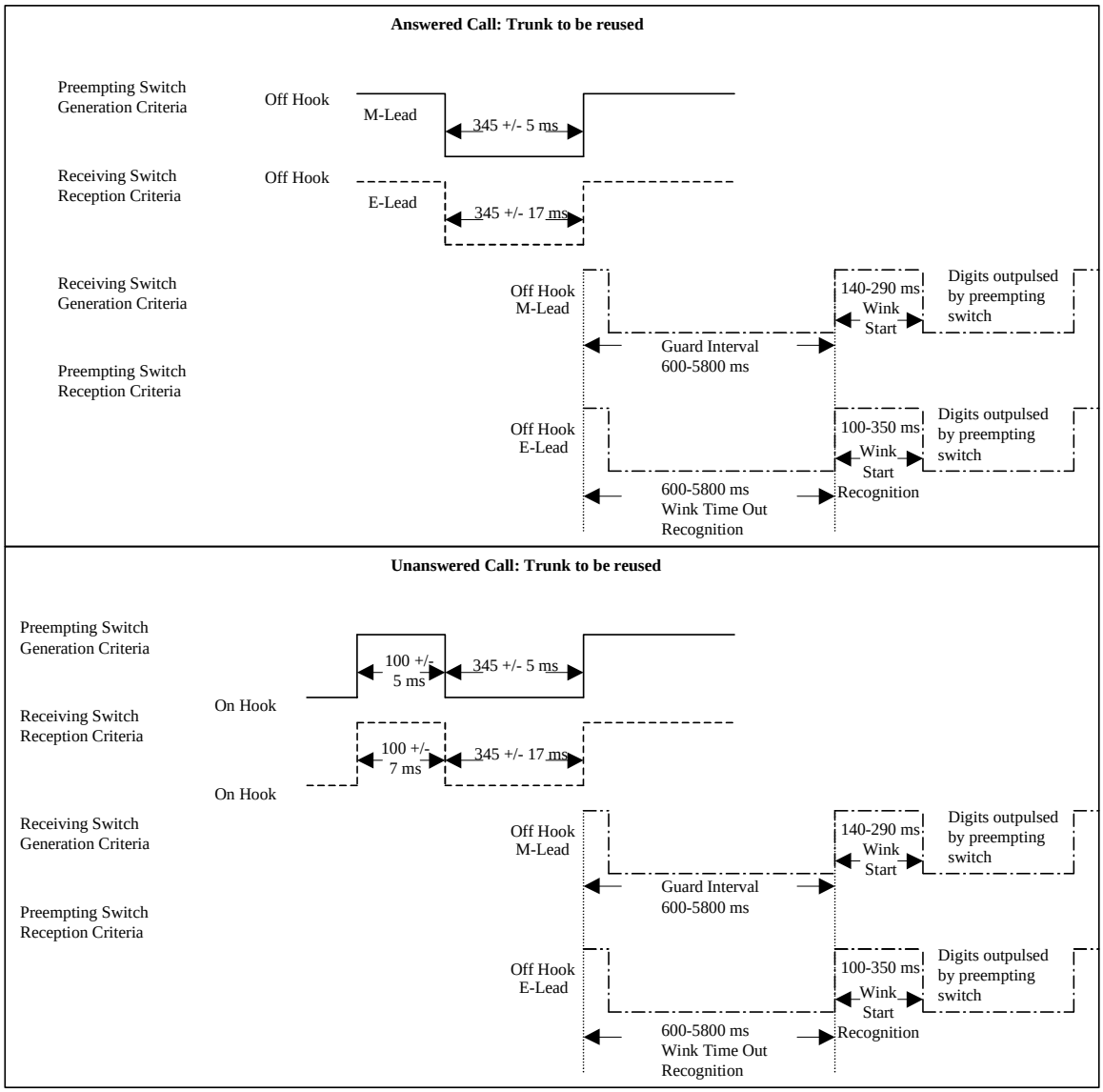

Figure 3-2. DSN Preempt Signals

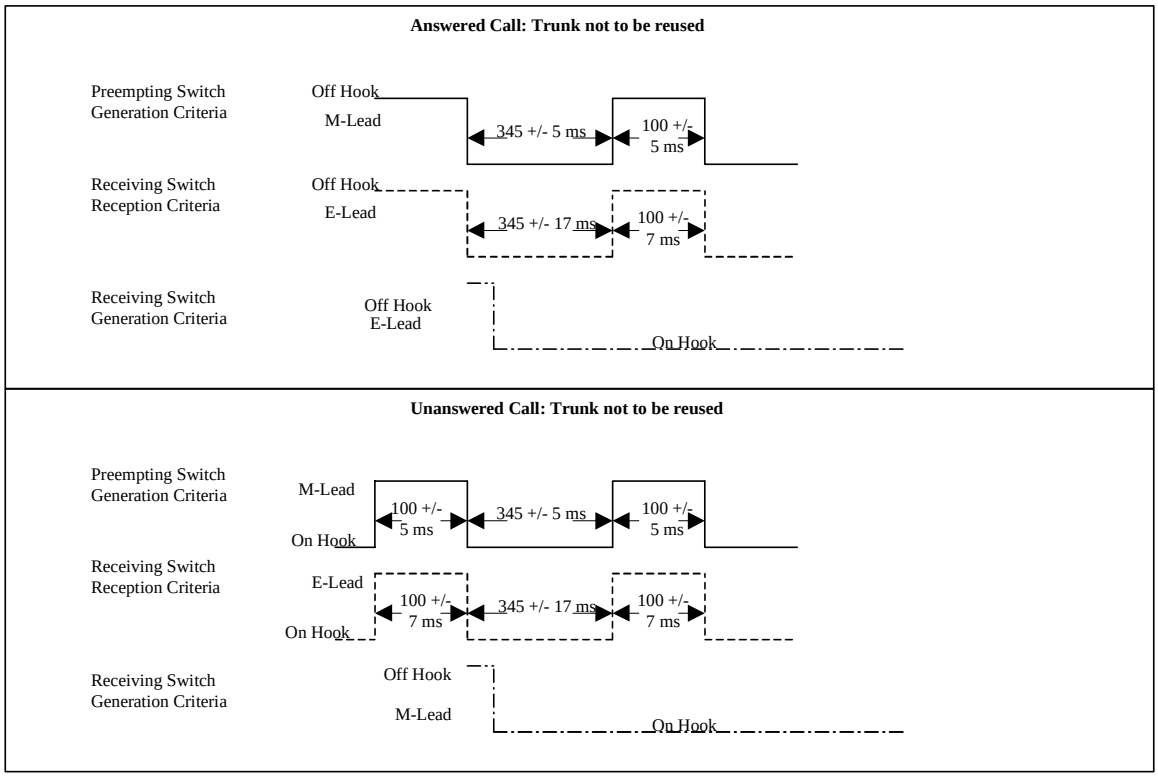

Figure 3-2. DSN Preempt Signals (continued)

Table 3-2. Multi-Level Precedence and Preemption Signaling Sequences

Preemption Type	Expected Signaling Sequences
Answered Call, Circuit to be Reused	The preempting switch shall signal the preempted trunk to be reused with: A 340- to 350-millisecond on-hook pulse AND Followed by a normal off-hook seizure to complete the call for the preempting user.
Unanswered Call, Circuit to be Reused	The preempting switch shall: Release the terminating trunk toward the unanswered user, AND Return an off-hook of 100 ± 5 milliseconds toward the originating trunk, AND Followed by an on-hook of 340 to 350 milliseconds AND Followed by normal off-hook seizure signal to complete the call for the preempting user.
Answered Call, Circuit Not to be Reused	The preempting switch shall signal the preempted trunk not to be reused with: A 340- to 350-millisecond on-hook pulse AND Followed by an off-hook "pedestal" of 100 ± 5 milliseconds, AND Followed by on-hook supervision.
Unanswered Call, Circuit Not to be Reused	The preempting switch shall: Return an off-hook of 100 ± 5 milliseconds toward the originating trunk, AND Followed by an on-hook of 340 to 350 milliseconds AND Followed by an off-hook of 100 ± 5 milliseconds, AND Followed by on-hook supervision

3.4.2 Primary Rate Interface (PRI)

[Required: TS, EOS, SMEO, MFS, PBX1] Requirements for MLPP PRI signaling shall be in accordance with ANSI Standards T1.619-1992, T1-619a-1994 and section 2.3.4.

3.4.3 Common Channel Signaling Number 7 (CCS7)

[Required: TS, EOS, MFS - Conditional: SMEO] Requirements for MLPP CCS7 signaling shall be in accordance with ANSI Standards T1.619-1992 and T1-619a-1994.

3.5 Analog Line MLPP

3.5.1 Busy At The Called Party's Interface

[Required: EOS, SMEO, MFS, PBX1] The following busy line treatment at the called party's interface for precedence calls applies to analog terminating lines. The line treatments apply to inter-switch calls or calls between stations on the same switch.

3.5.1.1 Line Active With A Lower Precedence Call

[Required: EOS, SMEO, MFS, PBX1] Precedence calls arriving at a busy station that is classmarked as premptable shall preempt the active lower precedence call. The active busy station shall receive continuous preemption tone until an on-hook signal is received and the other party shall receive preemption tone for a minimum of 3 seconds. (see section 5, table 5-5) After going on-hook, the station to which the precedence call is directed shall be provided precedence ringing (see section 5, table 5-4). The station shall be connected to the preempting call after going off-hook.

If Call Waiting is invoked on the terminating line, it shall be ignored and the existing lower precedence call shall be preempted. (Refer to paragraph 3.8.1.3)

3.5.1.2 Line Active With An Equal or Higher Precedence Call Above Routine

[Required: EOS, SMEO, MFS, PBX1] Precedence calls arriving at a station that is busy with an equal or higher precedence call shall be routed to a Blocked Precedence Announcement (BPA) (Table 3-1). If the called station has activated call forwarding, the switch shall attempt to complete the call to the forward destination

3.6 ISDN MLPP Basic Rate Interface (BRI)

[Required: EOS, SMEO, MFS, PBX1]

3.6.1 General Description

The ISDN MLPP BRI interface allows the simultaneous transmission of voice, circuit-switched data, and packet data over a single customer line connecting CPE and a digital switch. Specifically, the basic access allows the provision of two 64-kbps B channels, which may be used to carry voice, circuit-switched data, or packet data, and a 16-kbps D channel, which can carry signaling and packet information.

Requirements for this feature shall be in accordance with ANSI Standard ANSI T1.619-1992, ANSI T1.619a-1994 and section 2.3.3.

3.6.2 Single B-Channel, Single Appearance, Single Directory Number (DN)

Required: EOS, SMEO, MFS, PBX1] The following busy line treatment at the called party's interface for precedence calls applies to digital (ISDN and non-ISDN) terminating lines. The line treatments also apply to inter-switch calls and calls between stations on the same switch.

3.6.2.1 Line Active With A Lower Precedence Call

[Required: EOS, SMEO, MFS, PBX1] Precedence calls arriving at a busy station that is classmarked as preemptable shall preempt the active lower precedence call. The active busy station shall receive continuous preemption tone until an on-hook signal is received and the other party shall receive preemption tone for a minimum of 3 seconds. (see section 5, table 5-5) After going on-hook, the station to which the precedence call is directed shall be provided precedence ringing (see section 5, table 5-4). The station shall be connected to the preempting call after going off-hook.

If Call Waiting is invoked on the terminating line, it shall be ignored and the existing lower precedence call shall be preempted. (Refer to Paragraph 3.8.1.3)

3.6.2.2 Line Active With An Equal or Higher Precedence Call

[Required: EOS, SMEO, MFS, PBX1] Precedence calls arriving at a station that is busy with an equal or higher precedence call shall be routed to a Blocked Precedence Announcement (BPA) (Table 3-1). If the called station has activated call forwarding, the call shall be forwarded to the new number at the same precedence level.

3.6.3 Single B-Channel, Multiple Appearances, Single Directory Number (DN)

[Required: TS, EOS, SMEO, MFS, PBX1] This section describes the requirements for processing precedence calls over a single B-Channel ISDN interface with a station set that has multiple appearances and one directory number.

Incoming precedence calls to a multiple appearance ISDN station set shall provide a precedence ringing tone on the next available button as well as a visual display of the precedence level on the station set. The called party shall then have the option of either placing the current call on hold and picking up the incoming precedence call or ignoring the call.

This process of placing a call on hold and answering a precedence call shall remain the same until the BRI is saturated (i.e. all call appearances are in use). When an incoming precedence call is made to a saturated BRI, the lowest precedence call (including those on hold) shall be preempted.

If a held call has the lowest precedence, the switch shall send a preemption tone to the held caller. The switch also sends a preemption tone to the corresponding appearance on the station set of the destination DN that has placed the call on hold. After a preset time the call is cleared and the

switch sends a precedence ring to the corresponding appearance on the station set of the destination DN. The DN user then hears the precedence ringing, indicating that the call on hold has been dropped. The DN user also sees the precedence level of this new call on the station set display. The DN user shall have the option of answering the call, letting it forward to an alternate party, and/or letting it divert to an attendant.

If the active call has the lowest precedence, the switch shall send a preemption tone to active call and the destination DN. When the destination DN goes on-hook, a precedence ring is received indicating the incoming precedence call.

In both cases, the other held calls are not preempted and may by retrieved at any time.

3.6.4 Two (2) B-Channels, Multiple Appearances, Single Directory Number (DN)

[Required: TS, EOS, SMEO, MFS, PBX1] The requirements for processing precedence calls over a two (2) B-Channel ISDN interface with a station set that has multiple appearances and one directory number shall be identical to that in section 3.6.3 (precedence calls over a single B-Channel ISDN interface with a station set that has multiple appearances and one directory number).

This interface is also limited by the number of possible appearances on the ISDN station set.

3.6.5 Two B-Channels, 2 Directory Numbers (DN)

[Required: TS, EOS, SMEO, MFS, PBX1] This section describes the requirements for processing precedence calls over a two B-Channel ISDN interface with two directory numbers.

This configuration offers a wide range of options. In this configuration, the BRI may be configured as follows:

- two voice channels or
- two data channels or
- one voice and one data channel

In the voice channel configuration, each voice channel shall function identical to a Single B-Channel, single Directory Number BRI.

If the ISDN call appearance is set up as data-mode only (1 or 2 B-Channels equipped for data), preemption by incoming voice calls shall not be permitted. Any incoming voice calls shall receive the appropriate treatment.

If one BRI is designated for voice traffic and the other for data traffic both of the above comments apply, respectively.

3.7 ISDN MLPP Primary Rate Interface (PRI)

[Required: TS, EOS, SMEO, MFS, PBX1] Requirements for ISDN MLPP PRI shall be in accordance with ANSI Standards T1.619-1992 and T1-619a-1994.

[Conditional: TS, EOS, SMEO, MFS, PBX1] Requirements for ETSI ISDN MLPP PRI shall be in accordance with ITU-T Standards Q.955.3 -1993.

3.7.1 Definitions

a. **MLPP Service Domain**: An MLPP service domain consists of a set of MLPP subscribers (MLPP users) and the network and access resources that are in use by that set of MLPP subscribers at any given time. Connections and resources that are in use by MLPP subscribers may only be preempted by higher precedence calls from MLPP subscribers within the same domain. The service domain consist of a three octet field ranging from 00 00 00 to FF FF FF in hexadecimal. The DSN service domain is zero (0).

b. **Network**: In this standard, "network" refers to all telecommunications equipment that has any part in processing a call or a supplementary service for the user referred to. It may include local exchanges, transit exchanges, and NT2s but does not include the ISDN terminal and is not limited to the "public" network or any other particular set of equipment.

c. **MLPP Call**: An MLPP call is a call that has a precedence level established and is ether being setup or is setup. In Digital Subscriber Signaling System number 1 (DSS1: ISDN Q.931 signaling), an MLPP call is a call from an MLPP subscriber for which a setup has been sent but no DISCONNECT has been sent or received.

d. **Preemptable Circuit**: A Preemptable circuit is a circuit that is active with or reserved for an MLPP call: (a) within the same domain as the preempting call and (b) with a lower precedence than the preempting call. A busy or reserved circuit for which a precedence level has not been specified is not a preemptable circuit.

e. **Preemption initiating exchange:** A preemption initiating exchange is the exchange that is congested (i.e. no idle circuits) and has received a preempting call setup.

3.7.2 Precedence Level Information Elements

[Required: TS, EOS, SMEO, MFS, PBX1] The MLPP ISDN PRI SETUP Message shall contain the Precedence Level Information Element in Codeset 5 as shown in Table 3-3 below.

Table 3-3. Precedence Level Information Element (Codeset 5)

Bit:	8	7	6	5	4	3	2	1
Octet1	Precedence Level Information 0 1 0 0 0 0 0 1 Element Identifier							
2	Length of Precedence Level Contents							
3	1 Ext	Coding Standard			Spare	Precedence Level		
4	0/1 Ext	Spare				Change Value	Spare	LFB Indication
5	1st Network Identity Digit					2nd Network Identity Digit		
6	3rd Network Identity Digit					4th Network Identity Digit		
7	Most Significant Bit (DSN MLPP Service Domain 1st Octet)							
8	DSN MLPP Service Domain (2nd Octet)							
9	Least Significant Bit (DSN MLPP Service Domain 3rd Octet)							

Octet 3:

Bit 8 Set to 1 as an extension bit

Bits: 7-6 (Coding standard)

0 0 CCITT standardized coding

1 0 National Standard*

*The coding standard for DSN shall be assigned as “National”

Bit 5 (Spare)

Bits 4 3 2 1 (Precedence level)

0 0 0 0 (FLASH OVERRIDE-highest)

0 0 0 1 (FLASH)

0 0 1 0 (IMMEDIATE)

0 0 1 1 (PRIORITY)

0 1 0 0 (ROUTINE-lowest)

0 1 0 1

to (Spare)

1 1 1 1

Octet 4:

Bit 8	Set to 0/1 as an extension bit
Bits 7-6-5	(Spare)
Bit 4	(Change value)
0	Precedence level coding privilege may be changed at network boundaries
1	Precedence level coding privilege may not be changed at network boundaries
Bit 3	(Spare)
Bits 2-1	(Look forward busy indication)
0 0	LFB allowed
0 1	LFB not allowed
1 0	Path reserved
1 1	Spare

Octets 5-6 (Network Identity, NI). Each digit is coded in a binary decimal representation from 0 to 9. The first NI digit is coded 0. The Telephony Country Code (TCC) follows in the second to the fourth NI digits (the most significant TCC digit is in the second NI digit). If the TCC is one or two digits long, the excess digits(s) is inserted with the code for RPOA or network identification, if necessary. If octet 6 is not required, it is coded all zeros.

Octets 7-9 (DSN MLPP Service Domain). A code expression in pure binary the number allocated to an DSN MLPP Service Domain to uniquely identify a customer domain across multiple ISDN networks. Bit 8 of octet 7 is the most significant bit and bit 1 of octet 9 is the least significant bit.

3.7.3 Disconnect Message Information Cause Values

[Required: TS, EOS, SMEO, MFS, PBX1] The MLPP ISDN PRI Q.931 DISCONNECT message shall contain the following CAUSE values shown in table 3-4 as defined in the ANSI Standards T1.619-1992 and T1-619a-1994.

Table 3-4. Disconnect Message Cause Value

Disconnect Message Cause Value	Description
8	Answered or Unanswered Call; Circuit is not to be Reused
9	Answered or Unanswered Call; Circuit is to be Reused

46	Unavailable Resources; Precedence Call is Blocked with Equal or Higher Precedence Calls

3.7.4 Signal Information Element

[Required: TS, EOS, SMEO, MFS, PBX1] For providing tones and announcements, the Signal IE, as described in 4.5.24 of ANSI T1.607, shall be used with the following two US national codepoints for signal values as shown in table 3-5.

Table 3-5. US National Codepoints for Signal Values

Signal Value	Explanation	North American Practice
9	Preemption tone is on	Precise tone is a continuous 440 Hz tone added to a 620 Hz tone
-	Precedence call alerting ring back tone on	Ring back tone (audible ringing tone) is a 440 Hz tone added to a 480 Hz tone repeated in a 1.64 s on, 0.36 s off pattern
66		Precedence call alerting 1.64 s on, 0.36 s off
Note – No signal value is assigned to "precedence call alerting ring back tone on" since the tone is always applied by the destination exchange. This ring back tone is as indicated in the table.		

Signal value (Octet 3)

Bits 8 7 6 5 4 3 2 1

0 0 0 0 1 0 0 1 (9) Preemption tone

0 1 0 0 0 0 1 0 (66) Alerting on-pattern 2

(Special/priority alerting)

3.7.5 ANSI T1.619a Setup Message Called Party Number Format

[Required: TS, MFS, EOS, SMEO, PBX1] The ANSI T1. 619a ISDN Setup Message called party number format shall be as shown in table 3-6.

Table 3-6. ANSI T1.619a ISDN Setup Message Called Party Number Format

Route Control Digit	Area Code	Switch Code	Line Number
[Y]	**(KXX)**	**KXX**	**XXXX**
Where: X is any digit 0-9 K is any digit 2-8 Y is any digit 0-3			

Note: Digits shown in brackets [ ] are only required for TS and MFS switches and are not present on all calls. Digits shown in parenthesis ( ) are not present on all calls.

3.7.6 ANSI T1.619a and non-ANSI T1.619a Interaction

[Required: TS, EOS, SMEO, MFS, PBX1]

a. Trunk-to-trunk tandem calls. The switch shall have the capability to assign a default DSN MLPP service domain to an ANSI T1.619a trunk (i.e. ISDN PRI, SS7) that tandems from a non-ANSI T1.619a trunk (i.e. T1/E1 CAS, Analog E&M, ISDN PRI, SS7). The default DSN MLPP domain shall be assigned by the switch via the administration terminal, and shall be a range from 00 00 00 to FF FF FF in hexadecimal.

b. Trunk-to-line calls. The switch shall have the capability to assign a DSN MLPP service domain on a per line basis. The switch shall have the capability to assign a default DSN MLPP service domain to a line that terminates an incoming non-ANSI T1.619a trunk call.

c. Line-to-trunk calls. The switch shall have the capability to assign a default DSN MLPP service domain to an ANSI T1.619a trunk that originates from a line that is not assigned a DSN MLPP service domain. The switch shall allow calls placed from a line with or without an assigned DSN MLPP service domain to route over non-ANSI T1 619a trunks.

d. Interaction between unlike MLPP service domains. The following rules apply for calls placed between unlike DSN MLPP service domains.

(1) The switch shall allow connection (line-to-trunk, trunk-to-line, trunk-to-trunk or line-to-line) between unlike DSN MLPP service domains when resources are available.

(2) When a call is placed between unlike MLPP service domains, the switch shall class mark the DSN MLPP service domain of the connection (line-to-trunk, trunk-to-line, trunk-to-trunk or line-to-line) based on the DSN MLPP service domain that entered the switch (trunk or line).

EXAMPLE 1 (Line-to-line): If an intra-switch call is placed between two subscribers with different DSN MLPP service domains the switch shall class mark the connection with the DSN MLPP service domain of the originator

EXAMPLE 2 (Trunk-to-trunk): If an incoming call is placed to a switch via a non-ANSI T1.619a trunk (i.e. T1/E1 CAS, Analog E&M, SS7, ISDN PRI) that tandems to an ANSI T1.619a trunk, the switch shall assign the default DSN MLPP service domain to the outbound ANSI T1.619a trunk, and class mark the connection as the switch assigned default DSN MLPP service domain.

EXAMPLE 3 (Trunk-to-line): If an incoming call is placed to a switch via a non-ANSI T1.619a trunk (i.e. T1/E1 CAS, Analog E&M, SS7, ISDN PRI) that terminates to a line, the switch shall assign the default DSN MLPP service domain to the line, and class mark the connection as the switch assigned default DSN MLPP service domain.

EXAMPLE 4 (Line-to-trunk): If a call is originated from a subscriber over a non-ANSI T1.619a trunk (i.e. T1/E1 CAS, Analog E&M, SS7, ISDN PRI), the switch shall class mark the DSN MLPP service domain of the connection as the DSN MLPP service domain of the originator.

(3) MLPP interaction shall not be allowed between unlike DSN MLPP service domains.

3.8 MLPP Interactions with Common Optional Station Features and Services

This section describes the requirements for MLPP interactions with other station features and services. These features and services shall not interact adversely with mandatory MLPP features.

3.8.1 Precedence Call Waiting

[Conditional: TS, EOS, SMEO, MFS, PBX1] The following Precedence Call Waiting treatment shall apply to precedence levels of PRIORITY and above.

3.8.1.1 Busy with higher precedence call

[Conditional: TS, EOS, SMEO, MFS, PBX1] If the precedence level of the incoming call is lower than that of the existing MLPP call, precedence call waiting shall be invoked. If the incoming call is PRIORITY or above, the precedence call waiting tone (see section 5, table 5-5) shall be applied to the called party.

3.8.1.2 Busy with equal precedence call

[Conditional: TS, EOS, SMEO, MFS, PBX1] The switch shall provide the precedence call waiting signal (see section 5, table 5-5) to the called station. The switch shall apply this signal regardless of other programmed features such as call forwarding on busy, caller ID, etc. The called station shall be able to place the current active call on hold, or disconnect the current active call and answer the incoming call.

3.8.1.3 Busy with lower precedence call

[Conditional**: TS, EOS, SMEO, MFS, PBX1]** The switch shall preempt the active call. The active busy station shall receive continuous preemption tone until an on-hook signal is received and the other party shall receive preemption tone for a minimum of 3 seconds. After going on-hook, the station to which the precedence call is directed shall be provided precedence ringing. The station shall be connected to the preempting call after going off-hook.

3.8.1.4 No Answer

[Conditional: TS, EOS, SMEO, MFS, PBX1] If, after receiving the precedence call waiting signal, the busy called station does not answer the incoming DSN call within the maximum programmed time interval, the switch shall treat the call in accordance with paragraph 3.3.

3.8.2 Call Forwarding

[Conditional : TS, EOS, SMEO, MFS, PBX1] Call forwarding is a conditional terminating feature that is subscribed to by the called party. This feature shall permit user lines to direct calls to either another line or to an attendant. The feature will be either user activated by dialing the appropriate feature code followed by the address of the line to which calls are to be forwarded or will be assigned by the switch administrator. Calls forwarded to lines (numbers) which have call forwarding already activated may be forwarded again. The precedence level of calls shall be preserved during the forwarding process. The forwarding address may be any telephone number, subject to the class-of-service restrictions of the line activating the feature.

3.8.2.1 Call Forwarding at a Busy Station

[Conditional : TS, EOS, SMEO, MFS, PBX1] a. If the incoming call is of higher precedence level than the established call (or calls if three way calling is established) at the busy station being called, all calls to the busy station shall be preempted and the incoming call shall be established, i.e., the Call Forwarding service shall not be invoked.

b. If the incoming call is of equal or lower precedence level than the established call, (or calls if three way calling is established) at a busy station being called, the Call Forwarding service shall be invoked.

c. If the called C^2 User, Special C^2 User, or Other DSN User is nonpreemptable (is not classmarked for preemption), the Call Forwarding service shall be invoked regardless of the precedence levels of incoming call and established calls.

d. The precedence level of calls is preserved during the forwarding process, and the forwarded to user may be preempted.

e. If Call Forwarding Busy is activated, and a precedence call (PRIORITY and above) is forwarded (including possible multiple forwarding), and if this forwarded call is not responded to by any forwarded-to party within a specified period of time (typically 30 seconds), the call shall be diverted to an attendant.

3.8.2.2 Call Forwarding - No Reply at Called Station

[Conditional: TS, EOS, SMEO, MFS, PBX1]

a. The precedence level of calls is preserved during the forwarding process, and the forwarded to user may be preempted.

b. If Call Forwarding is activated by the called party and the called party has specified a forwarded-to party, the forwarding procedure shall be performed. If a precedence call (PRIORITY and above) is forwarded (including possible multiple forwarding) and is not responded to by any forwarded-to party (e.g. called party busy with a call of equal or higher precedence level; or called party busy and nonpreemptable) within a specified period of time (typically 30 seconds), the call shall be diverted to an attendant.

3.8.3 Call Transfer

[Conditional: EOS, SMEO, MFS, PBX1] There are two types of call transfers: Normal (transfer of an incoming call to another party) and Explicit (both calls are originated by the same subscriber). The switch shall provide the following interactions with both normal and explicit call transfers:

3.8.3.1 Call transfer interaction at different precedence levels.

[Conditional: EOS, SMEO, MFS, PBX1] When a call transfer (line-to-line, line-to-trunk, trunk-to-line, or trunk-to-trunk) is made at different precedence levels, the switch that initiates the transfer shall class mark the connection at the highest precedence level of the two segments of the transfer.

3.8.3.2 Call transfer interaction at same precedence levels.

[Conditional: EOS, SMEO, MFS, PBX1] The switch that initiates a call transfer (line-to-line, line-to-trunk, trunk-to-line, or trunk-to-trunk) between two segments that have the same precedence level shall maintain the precedence level upon transfer.

3.8.4 Call Hold

[Conditional: TS, EOS, SMEO, MFS, PBX1] Call Hold is a function of the serving switch and shall be invoked by going on-hook then off-hook. Held calls shall retain the precedence of the originating call. All lines are subject to normal preemption procedures.

Figure 3-3 illustrates three typical call hold scenarios. In each scenario caller #1 is on hold with caller #3 and is talking to caller #2.

In scenario 1, caller #3 receives an incoming higher precedence call from caller #4. Caller #3 receives preemption tone. Once caller #3 acknowledges the preemption tone by going on hook, the call between #4 and #3 is established when caller #3 answers caller #4. **C**aller #1 will also receive preemption tone only if caller #1 attempts to retrieve caller #3 while preemption tone is being sent to caller #3. (Note: preemption tone shall not be sent to caller #1 while active with caller #2. This would give caller #1 the false indication that the active call with caller #2 is being preempted.). Caller #2 remains connected to caller #1 and does not receive any preemption notification.

In scenario 2, caller #1 receives an incoming higher precedence call from caller #4. Caller #1, caller #2, and caller #3 receive preemption tone (see section 5, table 5-2). Once caller #1 acknowledges the preemption and then goes on hook, the higher precedence call from caller #4 is offered. Callers #2 and #3 are disconnected and the call between caller #4 and caller #1 is established.

In scenario 3, caller #2 receives an incoming higher precedence call from caller #4. Caller #2 receives a preemption tone. Caller #1 receives a preemption tone. The tone indicates to caller #1 that caller #2 is being preempted. Once caller #1 goes on-hook, caller #1 receives a ringback from the call on hold, caller #3.

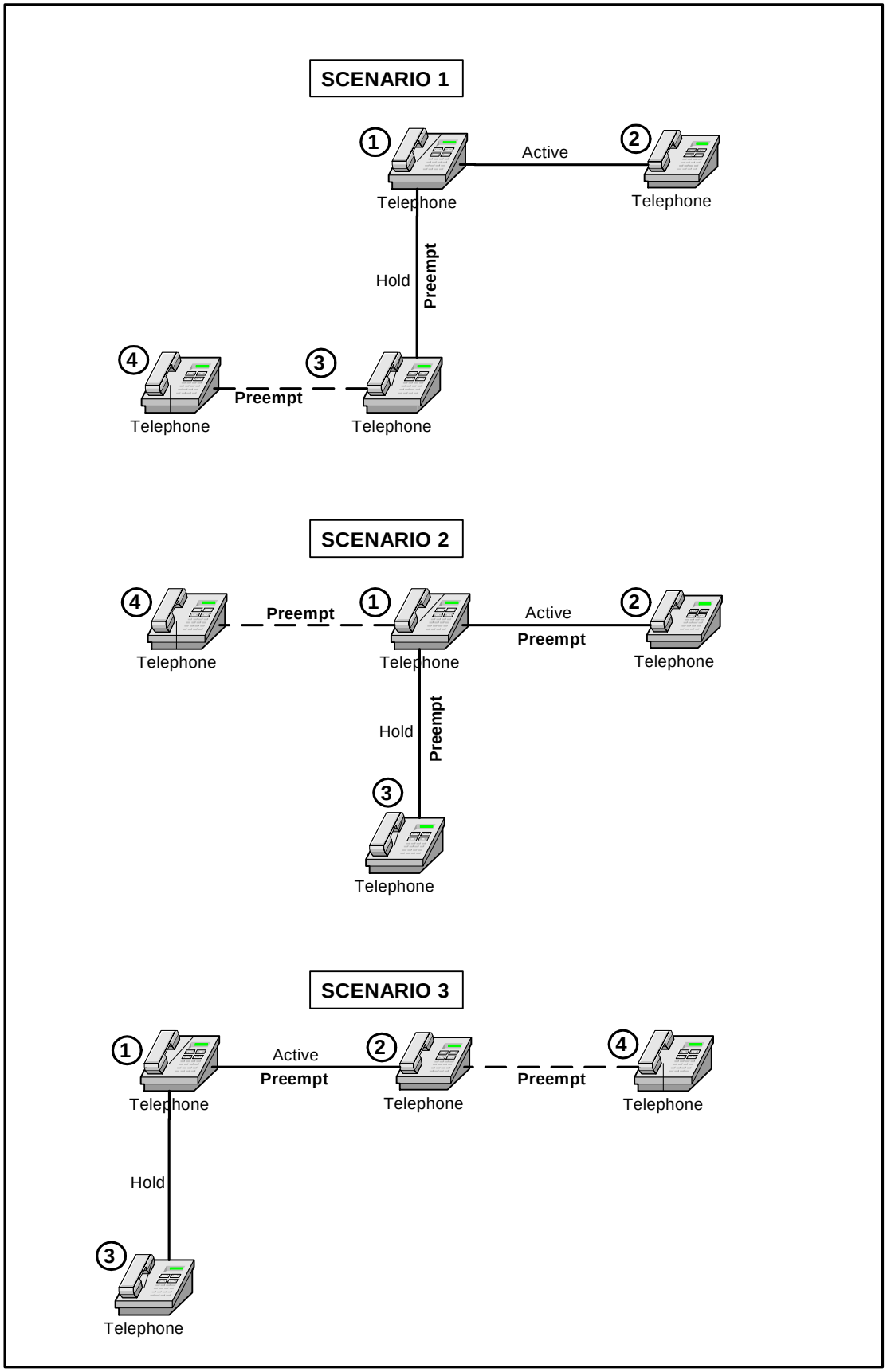

Figure 3-3. Call Hold Scenarios

3.8.5 Three-Way Calling (TWC)

[Conditional: EOS, SMEO, MFS, PBX1] In Three-Way calling, each call shall have its own precedence level. When a three-way conversation is established, each connection shall maintain its assigned precedence level. Each connection of a call resulting from a split operation shall maintain the precedence level that it was assigned upon being added to the three-way conversation.

The switch shall class mark the originator of the three-party call at the highest precedence level of the two segments of the call. Incoming calls to lines participating in TWC that have a higher precedence than the highest of the two segments shall preempt unless the call is marked "non-preemptable".

When a higher precedence call is placed to any one of the three-way call participants, that participant receives the preemption tone (see Section 5, Table 5-5). The other two parties shall receive a conference disconnect tone as described in Table 5-5. This tone indicates to the other parties that one of the other three-way call participants is being preempted.

In a three-way conference call where each connection is established at different precedence levels, the precedence level of the participant who initiated the three way conference shall be assigned the highest precedence of the two connections.

3.8.6 Call Pick-Up

[Conditional: EOS, SMEO, MFS, PBX1] A user line that is equipped to answer any calls directed to other lines within the user's own preset pickup group, as established by an administrative facility, by dialing the appropriate feature code.

a. If a call pickup group has more than one party in an unanswered condition and the unanswered parties are at different precedence levels, a call pickup attempt in that group shall retrieve the highest precedence call first. If multiple calls of equal precedence are ringing simultaneously, a call pickup attempt in that group shall retrieve the longest ringing call first.

b. If a party in a call pickup group is busy, and an incoming precedence call is placed to that number, normal MLPP rules shall apply. This call cannot be picked up within the call pickup group unless it is an unanswered call. (provided that there are no additional features such as call waiting or call forwarding)

3.8.7 Preset Conferencing

3.8.7.1 Conference Precedence Level

[Required: TS, MFS, EOS - Conditional: SMEO, PBX1] All addresses shall be processed at a precedence level equal to that precedence level dialed by the conference originator. The preset conference equipment, and all switched connections associated with the conference, shall be protected from seizure by calls at the same or lower precedence level as that furnished in the address.

a. When a preset conference is initiated an idle bridge in the desired conference group shall be seized and the conference connections attempted.
b. If all conference bridges are busy, ROUTINE conference call attempts shall be connected to "Line Busy" tone and call attempts at precedence levels above ROUTINE shall reexamine all conference bridges on a preemptive basis.
c. A conference bridge that is busy at the lowest level of precedence stored for all units shall be preempted for a higher precedence conference call.
d. When a conference bridge is preempted, a 2-second burst of preempt tone shall be provided to the conferees on the existing conference. The existing connections to the bridge shall be dropped, and the bridge shall automatically send an on-hook signal to the associated switch ports to permit the new connections to be established.
e. Where the requesting precedence level is equal to, or lower than, that of the existing conference, the connection shall be denied and the caller shall be provided a Blocked Precedence Announcement(BPA).

3.8.8 Multiline Hunt Service

[Conditional: EOS, SMEO, MFS, PBX1]

Pilot Line Hunt:

This hunting feature is a group of access lines arranged such that a lead published number, the pilot number is called first. If the first station (pilot number) is busy, the call goes to the second and subsequent stations until an idle, or the last station in the hunt group is called. If all stations are busy, the calling party will receive a busy tone (unless other forwarding, etc., features are present on the station).

Distributed Hunt:

This hunting feature is a group of access lines arranged such that incoming calls are sent to the station in the group that has been idle the longest.

Circular Hunt:

This hunt feature is a group of access lines arranged such that if any station in the hunt group is busy, hunting starts at the next station and continues through the rest of the group. This hunting feature will rotate or search the idle status of the lines in the group at least once (one cycle) before a busy tone is sent.

MLPP Interactions, Line Hunting.

If no line is available and one or more existing calls are of lower precedence level than that of the incoming call, an existing call of the lowest precedence level within the group shall be preempted.

A Blocked Precedence Announcement (BPA) is returned only when all remaining lines in the hunt group are found busy with calls of equal or higher Precedence.

If this feature is provided, it shall be in accordance with Telcordia Technologies GR-569-CORE, *Multiline Hunt Service*, Issue 1, June 2000.

3.8.9 Community of Interest (COI)

[Required: TS, EOS, MFS - Conditional: SMEO, PBX1]

The Community of Interest (COI) service enables users to form groups, to and from which access is subject to special restrictions and privileges. The service is primarily provided for users who generate the majority of their traffic to each other.

The COI service is provided as a switch based feature as opposed to a network-wide feature (i.e. no COI information is transported between switches). The COI service is provided by specific COI screening for originating and terminating call requests. The screening is based on the COI group information and user classmarks.

Members of a specific COI can communicate among themselves, but not, in general, with users external to the COI group. Specific COI members can have additional capabilities that allow them to originate calls external to the COI group and/or to receive calls external to the COI group. Specific COI groups can be configured with additional capabilities that prevent the COI members from originating calls to other members of the COI group, or from receiving calls from other members of the COI group.

The COI service also provides specific COI precedence treatment for calls originating from a COI member and/or calls received by a COI member.

3.8.9.1 Definition of Terms

Community of Interest Group

The Community of Interest (COI) feature enables users to form groups, to and from which access is subject to special restrictions and privileges. A COI group consists of a COI Screening list, a COI Precedence level and COI group classmarks.

COI Screening List

A COI Screening list specifies individual destinations or codes representing groups of destinations. Each code in this list can be from 3 to 15 digits. Outgoing calls are screened against this list together with the COI group classmarks to either allow/deny the call request.

COI Precedence Level

This COI precedence level specifies a precedence level that is either required or allowed, depending upon the COI group classmarks, for calls to/from users of a COI group.

COI Member

A user that has a COI group assigned is defined as being a member of that COI group.

Calls internal and external to COIs

The COI is a switch based feature as opposed to a network-wide feature i.e. no COI information is transported between switches. Calls are defined as being internal to the COI if:

- for an outgoing call request, the dialed destination matches a code in the user's COI screening list

- for local calls only, an incoming call request is to a user who is assigned to the same COI group as the calling user.

All other local calls to/from a COI member, including incoming inter-switch call requests received via trunk facilities, are treated as external calls to the COI. Call requests received via incoming trunk facilities are also deemed external but these do not undergo any COI screening and hence are not subject to the special COI restrictions and privileges.

COI GROUP CLASSMARKS

The COI group classmarks specify the outgoing and incoming call restrictions/privileges for calls internal to the COI group. The COI group classmarks are defined below:

COI Outgoing Classmarks

A COI group user with no outgoing classmarks limits the COI user to making calls which are internal to the COI only, i.e. to only those destination codes which are specified within the COI screening list. The user is allowed to exercise the normal authorized precedence level for these calls.

Outgoing precedence allowed

The COI user is allowed to exercise up to and including the COI precedence for calls internal to the COI.

Outgoing precedence mandatory

Only COI precedence calls are permitted for calls internal to the COI.

Outgoing calls barred within the COI

This restriction means that a COI user cannot make calls to destination codes specified in the COI screening list.

COI Incoming Classmarks

A COI group user with no incoming classmarks limits the COI user to receiving local calls from members of those COIs of which the user is a member. All other local calls are restricted. There is no restriction on calls received over trunk facilities since these do not undergo COI screening.

Incoming precedence mandatory

This COI service only permits calls internal to the COI that are at the COI precedence level. This only applies for local calls, which are internal to the COI (i.e. if the local calling user is a member of those COIs of which the user is a member).

Incoming calls barred within the COI

This restriction means that a COI user cannot receive calls from members of those COIs of which the user is a member. Unless the member classmark incoming access option is applied, calls from other non-COI members or other COI members are also restricted.

COI member classmarks

In addition to the COI group classamrks that are part of the COI group, specific COI members can also have COI classmarks at the subscriber level that specify the type of incoming and outgoing call restrictions/privileges for calls external to the COI.

COI Outgoing access

Outgoing access allows a COI user to make calls external to the COI, i.e. to all other destination codes not specified in the COI screening list, i.e. external to the COI. The user is only allowed to exercise the normal authorized precedence level for these calls.

Incoming access

Incoming access allows a COI user to receive local calls from all other non-COI users and also from those other COI users who allow outgoing access.

Incoming access with precedence

Incoming access with precedence allows a COI user to receive only local COI precedence level calls from all other non-COI users and also from those other COI users who allow outgoing access.

3.8.9.2 Feature Requirements

The Community of Interest (COI) feature enables users to form groups, to and from which access is subject to special restrictions and privileges. A user that has a COI group assigned is defined as being a member of that COI group. A specific user may be a member of up to eight different COI groups. The switch shall support a minimum of 24 COI groups.

Essentially, normal call establishment procedures apply, but to provide the COI service the switch screens the call request in conjunction with the COI information of the calling and/or the called user together with the COI user classmarks. As a result of this analysis, the call either fails (i.e. routed to intercept) for COI reasons or is allowed to proceed. Depending on whether the call fails due to a precedence check or a destination screening check, the intercept treatment applied is either "precedence blocked" or "destination not allowed".

3.8.9.2.1 COI Screening treatment for Originating Call Requests

[Required: TS, EOS, MFS - Conditional: SMEO, PBX1] To provide COI service for outgoing calls, the switch analyzes the call request in conjunction with the COI data of the calling user. If the call is internal to the COI, i.e. the dialed destination matches a code in the user's COI screening list, then the COI group classmarks are used to either fail the call or allow it to proceed.

In cases where a user is a member of more than one COI, the call is screened against each COI screening list, in the order the COIs were assigned to the user, until a match of the dialed destination and precedence is found. If a match is found, the call is treated as being internal to that COI and the COI group classmarks are used to either fail the call or allow it to proceed. If there is no such match, then the first COI that has a match on the dialed destination is chosen as the COI. If there is no COI that has a match on the dialed destination, then the call is deemed external to the COI.

If the call is external to any of the COIs assigned to the user, then the user's classmarks are used to either fail the call or allow it to proceed.

Table 3-7 describes the COI screening treatment for the different COI group classmarks and the COI member classmarks for an originating call request.

Table 3-7. COI Checks for an originating call request.

Calling User	Internal / External To COI	COI group Outgoing Call (OG) classmark	COI member Classmark	Disposition of Originating Call Request
COI Member	Internal	None	X	Allowed - User can exercise normally authorized precedence level

		OG Precedence Allowed	X	Allowed - User can exercise up to and including the COI precedence level
		OG Precedence Mandatory	X	Allowed - Only with the COI precedence level, else denied
		OG Calls Barred within COI	X	Denied - COI restriction
	External	X	None	Denied - COI restriction
			COI OG Access	Allowed - User can exercise normally authorized precedence level
No COI Assigned	X		X	Normal call and precedence handling

X = Don't Care

3.8.9.2.2 COI Screening treatment for Terminating Call Requests

[Required: TS, EOS, MFS - Conditional: SMEO, PBX1] To provide COI service for incoming calls, the switch analyzes the call request in conjunction with the COI data of the called user and calling user for local calls and the COI data of the called user for calls external to the switch.

If the call is external to the COI, the called COI member's classmarks, are used to either fail the call for COI reasons or allow it to proceed. The following calls are external to the COI:

- calls incoming on inter-switch trunk facilities
- calls from local users who are not members of any COI groups
- calls from local users who are not members of the called users COI group

If the COI members' classmark's indicate that incoming access is allowed only with COI precedence calls, then the called user's COI's precedence is used to determine if access is allowed or denied. In cases where a called user is member of more than one COI, the call is screened against each COI screening list, in the order the COIs were assigned to the user, until a match of the call precedence is found. If a match is found, the call is allowed, otherwise it is denied.

If the call is internal to the COI, i.e. calls from local users who are members of the same COI group as the called user, the COI's group classmarks are used to either fail the call for COI reasons or allow the call to proceed.

Table 3-8 describes the COI screening treatment for the different COI group classmarks and the COI member classmarks for a terminating call request.

Table 3-8. COI Checks for a Terminating call request.

Called User	Internal / External to COI	COI Group Incoming Call (IC) Classmark	COI member Classmark	Disposition of Terminating Call Request
No COI Assigned	X		X	Normal call and precedence handling
COI Member	Internal	None	X	Allowed - Precedence handling per normal
		IC Precedence Mandatory	X	Allowed only if call precedence matches COI precedence
		IC Calls Barred within COI	X	Denied - COI restriction
	External (local calls)	X	None	Denied - COI restriction
			COI IC Access	Allowed - Precedence handling per normal
			COI IC Access with Precedence	Allowed only if call precedence matches COI precedence
	External Trunk calls	X	X	Allowed – These calls are handled as normal. There is no COI screening performed for these calls

X = Don't Care

3.8.9.2.3 Billing

Call detail recording already records the call precedence level, which may be escalated due to the COI service. There are no additional call detail recording requirements for the COI feature.

3.8.9.2.4 Traffic

There are no additional traffic requirements for the COI service.

3.9 MLPP Common Channel Signaling Number 7 (CCS7)

[Required: TS, MFS, EOS - Conditional: SMEO] Requirements for MLPP CCS7 shall be in accordance with ANSI Standards T1.619-1992 and T1-619a-1994.

3.9.1 General Description

Common Channel Signaling System No. 7 (i.e., SS7 or C7) is a global standard for telecommunications defined by the International Telecommunications Union (ITU) Telecommunication Standardization Sector (ITU-T). The standard defines the procedures and protocol by which network elements in the public switched telephone network (PSTN) exchange

information over a digital signaling network to effect wireless (cellular) and wire line call setup, routing and control. The ITU definition of SS7 allows for national variants such as the American National Standards Institute (ANSI) and Bell Communications Research (Telcordia Technologies) standards used in North America and the European Telecommunications Standards Institute (ETSI) standard used in Europe.

The SS7 network and protocol are used for:

- basic call setup, management, and tear down
- wireless services such as personal communications services (PCS), wireless roaming, and mobile subscriber authentication
- local number portability (LNP)
- toll-free (800/888) and toll (900) wire line services
- enhanced call features such as call forwarding, calling party name/number display, and three-way calling
- efficient and secure worldwide telecommunications

3.9.2 Definitions

a. MLPP Service Domain: An MLPP service domain consists of a set of MLPP subscribers (MLPP users) and the network and access resources that are in use by that set of MLPP subscribers at any given time. Connections and resources that are in use by MLPP subscribers may only be preempted by higher precedence calls from MLPP subscribers within the same domain. The service domain is a three octet field with a range from 00 00 00 to FF FF FF in hexadecimal. The DSN service domain is zero (0).

b. Network: In this standard, "network" refers to all telecommunications equipment that has any part in processing a call or a supplementary service for the user referred to. It may include local exchanges, transit exchanges, and NT2s but does not include the ISDN terminal and is not limited to the "public" network or any other particular set of equipment.

c. MLPP Call: An MLPP call is a call that has a precedence level established and is ether being setup or is setup. In SS7, an MLPP call is a call with a precedence level for which the exchange has sent an initial address message (IAM) but has not sent or received a release (REL) message

d. Preemptable Circuit: A Preemptable circuit is a circuit that is active with or reserved for an MLPP call: (a) within the same domain as the preempting call and (b) with a lower precedence that the preempting call. A busy or reserved circuit for which a precedence level has not been specified is not a preemptable circuit.

e. Preemption initiating exchange: A preemption initiating exchange is the exchange that is congested (i.e. no idle circuits) and has received a preempting call setup.

3.9.3 Look-Ahead For Busy (LFB)

[Required: TS, MFS, EOS - Conditional: SMEO] Look-Ahead For Busy (LFB) is an information unit used to find out whether network resources are available to support the higher precedence call.

The switch shall provide the LFB feature in accordance with ANSI Standards T1.619-1992 and T1-619a-1994.

3.9.4 Precedence Parameters

[Required: TS, MFS, EOS - Conditional: SMEO] The MLPP CCS7 Initial Address Message (IAM) shall contain the Precedence Parameter and subfields as shown in table 3-9. The subfields in the precedence parameter identify the precedence level, the network identification and domain, and whether a path has been reserved or path reservation is allowed.

In case of congestion, IAMs carrying FLASH or FLASH OVERRIDE calls shall be assigned Level 3, IMMEDIATE calls shall be assigned level 2, PRIORITY calls shall be assigned level 1, and ROUTINE calls shall be assigned level 0 in the CCS7.

Table 3-9. Precedence Parameter and Sub Fields

Bit: 8 7 6 5 4 3 2 1

Octet 1	Spare	LFB	Spare	Precedence Level
2	1st Network Identity Digit			2nd Network Identity Digit
3	3rd Network Identity Digit			4th Network Identity Digit
4	Most Significant Bit (DSN MLPP Service Domain 1st Octet)			
5	DSN MLPP Service Domain (2nd Octet)			
6	Least Significant Bit (DSN MLPP Service Domain 3rd Octet)			

The following codes are used in the Precedence parameter subfields:

Octet 1:

Bit 8 (Spare)

Bits 7-6	(Look Forward Busy (LFB))
0 0	LFB allowed
1 0	LFB not allowed
0 1	Path reserved
1 1	Spare

Bits 5	(Spare)

Bits 4 3 2 1	(Precedence level)
0 0 0 0	(FLASH OVERRIDE-hightest)
0 0 0 1	(FLASH)
0 0 1 0	(IMMEDIATE)
0 0 1 1	(PRIORITY)
0 1 0 0	(ROUTINE-lowest)
0 1 0 1	
to	(Spare)
1 1 1 1	

Octets 2-3 contain a code for Network identity (NI). Each digit is coded in binary coded decimal representation from 0 to 9. The first digit of this field is coded 0. The Telephony Country Code (TCC) follows in the second to fourth NI digits (the most significant TCC digit is in the second NI digit). If the TCC is one or two digits long, the excess digits(s) is inserted with the code for RPOA or network identification, if necessary. If octet 3 is not required, it is coded all zeros.

Octets 4-6 contain a code expressing in pure binary representation the number allocated to an MLPP service domain. These numbers are allocated from the set of National Business Group Identifier codes in accordance with the procedures in Annex B, in chapter T1.119.9 of ANSI T1.113.

3.9.4.1 Actions Required at Originating Exchange

[Required: MFS, TS, EOS - Conditional: SMEO] Routing information in the MLPP CCS7 shall be supplied by the originating exchange. However, the design shall not preclude requests to a remote database for routing information.

3.9.4.2 MLPP CCS7 Transaction Capability Application Part (TCAP) - Definitions and Functions of Transaction Capability (TC) Operations, Parameters, and Error Codes

[Required: MFS, TS, EOS - Conditional: SMEO] The MLPP CCS7 functions and encoding for the Operation, Parameter and Error Code elements used by the TCAP protocol shall be as specified in ANSI T1.114.5-2000. DSN-specific requirements not covered by the ANSI standards are specified in the following paragraphs, citing the applicable sections of the ANSI standard.

3.9.4.2.1 Parameters

[Required: MFS, TS, EOS - Conditional: SMEO] Several DSN-specific parameters needed to support the MLPP service are specified in the following paragraphs, citing the applicable sections in the ANSI standard if they exist:

3.9.4.2.1.1 Bearer Capability Supported - 10010011

[Required: MFS, TS, EOS - Conditional: SMEO] This parameter indicates whether or not a requested bearer capability is supported and is used to indicate the reason a bearer capability requested was not available. The format of the Bearer Capability Supported parameter is illustrated in Figure 18/T1.114.5. The contents of this parameter are defined and coded as follows:

1. 00000001 – bearer capability is not supported.
2. 00000010 – bearer capability is supported.
3. 00000011 – bearer capability is not authorized.
4. 00000100 – bearer capability is not presently available.
5. 00000101 – bearer capability is not implemented.

3.9.4.2.1.2 Circuit Identification Code – 10011010

[Required: MFS, TS, EOS - Conditional: SMEO] The Circuit Identification Code parameter is used to identify the physical path between two exchanges. The parameter is coded contextual, is 2 octets in length and is of the type OCTECT STRING. The format and coding is as described in T1.113.3 Section 1.2.

3.9.4.2.1.3 Call Reference – 10011100

[Required: MFS, TS, EOS - Conditional: SMEO] The Call Reference parameter is used to identify a particular MLPP call within an exchange independent of the physical circuits. The parameter is six octets in length and is of the type OCTECT STRING. The format contents are as specified in ANSI T1.113.3, section 3.5 and Figure 7/T1.113.3.

3.9.5 RELEASE Message Cause Values

[Required: TS, MFS, EOS -Conditional: SMEO] The MLPP CCS7 RELEASE message shall contain the following CAUSE values as defined in the ANSI Standards T1.619-1992 and T1-619a-1994 as shown in table 3-10 below.

Table 3-10. RELEASE Message Cause Values

RELEASE Message Cause Value	Description
8	Answered or Unanswered Call; Circuit is not to be Reused
9	Answered or Unanswered Call; Circuit is to be Reused
46	Unavailable Resources; Precedence Call is Blocked with Equal or Higher Precedence Calls

3.9.6 DSN MLPP CCS7 Initial Address Message (IAM) Called Party Number Format

[Required: TS, MFS, EOS - Conditional, SMEO]. The MLPP CCS7 IAM called party number format shall be as shown in table 3-11.

Table 3-11. DSN Switch MLPP CCS7 IAM Called Party Number Format

Route Digit	Route Control Digit	Area Code	Switch Code	Line Number
X	**[Y]**	**(KXX)**	**KXX**	**XXXX**

Where: X is any digit 0 - 9
K is any digit 2 - 8
Y is any digit 0 - 3

Note: Digits shown in brackets [ ] are only required for TS and MFS switches and are not present on all calls. Digits shown in parenthesis ( ) are not present on all calls.

3.10 Channel associated signaling to Common channel signaling (CAS-to-CCS) trunk inter-working in a mixed media network

[Required: TS, MFS, EOS - Conditional: SMEO] The goal of the DISN is to migrate to a fully capable digital network that supports local and network ISDN services. The network of DSN telecommunications switches currently consists of a mixture of digital and analog transmission media. The DSN network migration is engineered to support discrete and selective routing that will allow clear-channel data transmission controllable by use of the route digit. The method used to ensure proper routing is based on the DSN World Wide Numbering and Dialing Plan (WWNDP).

Mixed-media backbone utilizes various modes of signaling consisting of intra-switch/inter-switch terminations that will ensure clear-channel data transmission of speeds up to 56 Kbps on a network basis. The DSN also supports Switched 64 Kbps (SW64) clear-channel transmission through selective routing using channel associated signaling (CAS) on PCM-30 (E-1) terminations and common channel signaling (CCS) protocols such as ISDN PRI and DSN SS7 on both PCM-24 (B8ZS/ESF) PCM-30 terminations.

The switch shall support the required Circuit Switched System call-processing treatment/handling of call types (line-to-trunk, trunk-to-line, and trunk-to-trunk) in a mixed-media backbone by the use of the DSN WWNDP as shown in tables 3-12 and 3-13 below. The switch shall support this call-processing treatment/handling of calls with the DSN WWNDP formats described in paragraph 4.5.2. The switch shall support the call-processing treatment/handling of calls as shown in tables 3-12 and 3-13 using CAS MFR1 2/6 signaling. If the SMEO supports CAS MFR1 2/6 signaling the call-processing treatment/handling of calls as shown in tables 3-12 and 3-13 are required.

Route selection for CCS data routes (circuit mode data) and CAS data routes with route digits 1 (Switched Data) or 6 (Hotline Data) shall not include:

- Analog trunks
- Trunks with data compression.
- A-law to u-law and/or u-Law to A-Law conversions.
- Data restrictions.

If the bearer capability (BC) of speech or 3.1K audio conflicts with data route digits 1 or 6 then no A-law to u-law or u-Law to A-Law conversions will be performed. If a BC of 56 Kbps (restricted or unrestricted) or 64 Kbps (restricted or unrestricted) conflict with a voice route digit of 0 or 5, then no conversion will be performed. ISDN PRI call handling/treatment does not use the dialed route digit in accordance with the DSN WWNDP; however, when the originator dials the data route code the switch shall assign the appropriate bearer capability (i.e. 56 Kbps data, 64 Kbps data etc.) All tandem calls of the same media type (i.e., SS7-to-SS7, CAS-to-CAS, PRI-to-PRI) are

transparent. Tandem calls of different media-type shall follow the treatment/call handling in accordance with tables 3-12 and 3-13 below. Signaling System No.7 (SS7) shall be considered conditional for the Small End Office.

Table 3-12. CAS-to-CCS Trunk Interworking Matrix (Line-to-Trunk and Trunk-to-Line)

Table 3-12. CAS-to-CCS Trunk Interworking Matrix (Line-to-Trunk and Trunk-to-Line)						
Ref #	**Originating (Term/Trunk)**	**Route Digit**	**Bearer Capability**	**Terminating (Term/Trunk)**	**Route Digit**	**Bearer Capability**
Line-to-Trunk						
1	Analog User	0/5	N/A	T1 CAS	0/5	N/A
2	Analog User	0/5	N/A	T1 SS7*	0/5	SP
3	Analog User	0/5	N/A	E1 CAS	0/5	N/A
4	Analog User	0/5	N/A	E1 SS7*	0/5	SP
5	Analog User	0/5	N/A	T1 PRI	N/A	SP
6	Analog User	0/5	N/A	E1 PRI	N/A	SP
7	Analog User	1/6	N/A	T1 CAS	1/6	N/A
8	Analog User	1/6	N/A	T1 SS7*	1/6	SP
9	Analog User	1/6	N/A	E1 CAS	1/6	N/A
10	Analog User	1/6	N/A	E1 SS7*	1/6	SP
11	Analog User	1/6	N/A	T1 PRI	N/A	SP
12	Analog User	1/6	N/A	E1 PRI	N/A	SP
13	ISDN BRI	0/5	SP	T1 CAS	0/5	N/A
14	ISDN BRI	0/5	SP	T1 SS7*	0/5	SP
15	ISDN BRI	0/5	SP	E1 CAS	0/5	N/A
16	ISDN BRI	0/5	SP	E1 SS7*	0/5	SP
17	ISDN BRI	0/5	SP	T1 PRI	N/A	SP
18	ISDN BRI	0/5	SP	E1 PRI	N/A	SP
19	ISDN BRI	1/6	SP	T1 CAS	1/6	N/A
20	ISDN BRI	1/6	SP	T1 SS7*	1/6	SP
21	ISDN BRI	1/6	SP	E1 CAS	1/6	N/A
22	ISDN BRI	1/6	SP	E1 SS7*	1/6	SP
23	ISDN BRI	1/6	SP	T1 PRI	N/A	SP
24	ISDN BRI	1/6	SP	E1 PRI	N/A	SP
25	ISDN BRI	0/5	56K CMD	T1 SS7*	1/6	56K CMD
26	ISDN BRI	0/5	56K CMD	E1 CAS	1/6	N/A
27	ISDN BRI	0/5	56K CMD	E1 SS7*	1/6	56K CMD

Table 3-12. CAS-to-CCS Trunk Interworking Matrix (Line-to-Trunk and Trunk-to-Line)						
Ref #	**Originating (Term/Trunk)**	**Route Digit**	**Bearer Capability**	**Terminating (Term/Trunk)**	**Route Digit**	**Bearer Capability**
28	ISDN BRI	0/5	56K CMD	T1 PRI	N/A	56K CMD
29	ISDN BRI	0/5	56K CMD	E1 PRI	N/A	56K CMD
30	ISDN BRI	0/5	64K CMD	T1 SS7*	1/6	64K CMD
31	ISDN BRI	0/5	64K CMD	E1 CAS	1/6	N/A
32	ISDN BRI	0/5	64K CMD	E1 SS7*	1/6	64K CMD
33	ISDN BRI	0/5	64K CMD	T1 PRI	N/A	64K CMD
34	ISDN BRI	0/5	64K CMD	E1 PRI	N/A	64K CMD
35	ISDN BRI	0/5	64K CMD	T1 CAS	1/6	N/A
36	ISDN BRI	1/6	56K CMD	T1 SS7*	1/6	56K CMD
37	ISDN BRI	1/6	56K CMD	E1 CAS	1/6	N/A
38	ISDN BRI	1/6	56K CMD	E1 SS7*	1/6	56K CMD
39	ISDN BRI	1/6	56K CMD	T1 PRI	N/A	56K CMD
40	ISDN BRI	1/6	56K CMD	E1 PRI	N/A	56K CMD
41	ISDN BRI	1/6	64K CMD	T1 CAS	1/6	N/A
42	ISDN BRI	1/6	64K CMD	T1 SS7*	1/6	64K CMD
43	ISDN BRI	1/6	64K CMD	E1 CAS	1/6	N/A
44	ISDN BRI	1/6	64K CMD	E1 SS7*	1/6	64K CMD
45	ISDN BRI	1/6	64K CMD	T1 PRI	N/A	64K CMD
46	ISDN BRI	1/6	64k CMD	E1 PRI	N/A	64K CMD
Trunk-to-Line						
47	T1 CAS	0/5	N/A	Analog User	N/A	N/A
48	T1 SS7*	0/5	SP	Analog User	N/A	N/A
49	E1 CAS	0/5	N/A	Analog User	N/A	N/A
50	E1 SS7*	0/5	SP	Analog User	N/A	N/A
51	T1 PRI	0/5	SP	Analog User	N/A	N/A
52	E1 PRI	0/5	SP	Analog User	N/A	N/A
53	T1 CAS	1/6	N/A	Analog User	N/A	N/A
54	T1 SS7*	1/6	SP	Analog User	N/A	N/A
55	E1 CAS	1/6	N/A	Analog User	N/A	N/A
56	E1 SS7*	1/6	SP	Analog User	N/A	N/A
57	T1 PRI	1/6	SP	Analog User	N/A	N/A
58	E1 PRI	1/6	SP	Analog User	N/A	N/A
59	T1 CAS	0/5	N/A	ISDN BRI	N/A	SP
60	T1 SS7*	0/5	SP	ISDN BRI	N/A	SP

Table 3-12. CAS-to-CCS Trunk Interworking Matrix (Line-to-Trunk and Trunk-to-Line)						
Ref #	**Originating (Term/Trunk)**	**Route Digit**	**Bearer Capability**	**Terminating (Term/Trunk)**	**Route Digit**	**Bearer Capability**
61	E1 CAS	0/5	N/A	ISDN BRI	N/A	SP
62	E1 SS7*	0/5	SP	ISDN BRI	N/A	SP
63	T1 PRI	N/A	SP	ISDN BRI	N/A	SP
64	E1 PRI	N/A	SP	ISDN BRI	N/A	SP
65	T1 SS7*	1/6	SP	ISDN BRI	N/A	SP
66	E1 PRI	1/6	SP	ISDN BRI	N/A	SP
67	E1 SS7*	1/6	SP	ISDN BRI	N/A	SP
68	T1 PRI	N/A	SP	ISDN BRI	N/A	SP
69	T1 SS7*	0/5	56K CMD	ISDN BRI	N/A	56K CMD
70	E1 SS7*	0/5	56K CMD	ISDN BRI	N/A	56K CMD
71	T1 PRI	0/5	56K CMD	ISDN BRI	N/A	56K CMD
72	E1 PRI	0/5	64K CMD	ISDN BRI	N/A	64K CMD
73	T1 SS7*	0/5	64K CMD	ISDN BRI	N/A	64K CMD
74	E1 SS7*	0/5	64K CMD	ISDN BRI	N/A	64K CMD
75	T1 PRI	0/5	64K CMD	ISDN BRI	N/A	64K CMD
76	E1 PRI	0/5	64K CMD	ISDN BRI	N/A	64K CMD
77	T1 CAS	1/6	N/A	ISDN BRI	N/A	56K CMD
78	T1 SS7*	1/6	56K CMD	ISDN BRI	N/A	56K CMD
79	E1 SS7*	1/6	56K CMD	ISDN BRI	N/A	56K CMD
80	T1 PRI	N/A	56K CMD	ISDN BRI	N/A	56K CMD
81	E1 PRI	N/A	56K CMD	ISDN BRI	N/A	56K CMD
82	T1 SS7*	1/6	64K CMD	ISDN BRI	N/A	64K CMD
83	E1 CAS	1/6	N/A	ISDN BRI	N/A	64K CMD
84	E1 SS7*	1/6	64K CMD	ISDN BRI	N/A	64K CMD
85	T1 PRI	N/A	64K CMD	ISDN BRI	N/A	64K CMD
86	E1 PRI	N/A	64K CMD	ISDN BRI	N/A	64K CMD

LEGEND:

56K/64K – 56/64 Kilobits per second

CMD – Circuit Mode Data

N/A – Not Applicable

SP – Speech or 3.1K bearer capability

* - Signaling System No.7 (SS7) for the SMEO is conditional

Table 3-13. CAS-to-CCS Trunk Interworking Matrix (Trunk-to-Trunk)

Table 3-13. CAS-to-CCS Trunk Interworking Matrix (Trunk-to-Trunk)						
Ref #	**Incoming Trunk Type**	**Route Digit**	**Bearer Capability**	**Outgoing Trunk Type**	**Route Digit**	**Bearer Capability**
Trunk-to-Trunk						
1	E1 CAS	1/6	N/A	T1/E1 SS7*	1/6	64K CMD
2	E1 CAS	0/5	N/A	T1/E1 SS7*	0/5	SP
3	T1 CAS	1/6	N/A	T1/E1 SS7*	1/6	56K CMD
4	T1 CAS	0/5	N/A	T1/E1 SS7*	0/5	SP
5	E1 CAS	1/6	N/A	T1/E1 PRI	N/A	64K CMD
6	E1 CAS	0/5	N/A	T1/E1 PRI	N/A	SP
7	T1 CAS	1/6	N/A	T1.E1 PRI	N/A	56K CMD
8	T1 CAS	0/5	N/A	T1/E1 PRI	N/A	SP
9	T1/E1 PRI	N/A	56/64K CMD	E1 CAS	1	N/A
10	T1/E1 PRI	N/A	SP	E1 CAS	0	N/A
11	T1/E1 PRI	N/A	56/64K CMD	T1 CAS	1	N/A
12	T1/E1 PRI	N/A	SP	T1 CAS	0	N/A
13	T1/E1 SS7*	1/6	56/64K CMD	T1 CAS	1/6	N/A
14	T1/E1 SS7*	1/6	SP	T1 CAS	1/6	N/A
15	T1/E1 SS7*	1/6	56/64K CMD	E1 CAS	1/6	N/A
16	T1/E1 SS7*	1/6	SP	E1 CAS	1/6	N/A
17	T1/E1 SS7*	0/5	SP	E1 CAS	0/5	N/A
18	T1/E1 SS7*	0/5	56/64K CMD	E1 CAS	1/6	N/A
19	T1/E1 SS7*	0/5	SP	T1 CAS	0/5	N/A
20	T1/E1 SS7*	0/5	56/64K CMD	T1 CAS	1/6	N/A
21	T1/E1 SS7*	1/6	56/64K CMD	T1/E1 PRI	N/A	56/64K CMD
22	T1/E1 SS7*	1/6	SP	T1/E1 PRI	N/A	SP
23	T1/E1 SS7*	0/5	56/64K CMD	T1/E1 PRI	N/A	56/64K CMD
24	T1/E1 SS7*	0/5	SP	T1/E1 PRI	N/A	SP

LEGEND:

56K/64K – 56/64 Kilobits per second

CMD – Circuit Mode Data

N/A – Not Applicable

SP – Speech or 3.1K bearer capability

* - Signaling System No.7 (SS7) for the SMEO is conditional

3.11 MLPP Interactions with Electronic Key Telephone Systems (EKTS) Features

3.11.1 Electronic Key Telephone Systems (EKTS)

[Conditional: MFS, EOS, SMEO, PBX1] Electronic Key Telephone Systems (EKTS) functions shall be provided by the switch as described in Telcordia Technologies GR-205-CORE, *Generic Requirements for ISDN Electronic Key Telephone Systems*, Issue 1, February 1996. Additional MLPP requirements are listed below.

3.11.1.1 Call Appearances

[Conditional: MFS, EOS, SMEO, PBX1] A call appearance shall be shared by all EKTS users. There shall not be separate call appearances for MLPP calls. All users shall be able to originate the authorized precedence level and receive all levels of precedence on a single call appearance for each DN. Each EKTS call appearance shall comply with the MLPP functionality specified in Section 3.0.

3.11.1.2 Hold

[Conditional: MFS, EOS, SMEO, PBX1] The EKTS Hold function shall comply with the requirements of paragraph 3.8.4 Call Hold.

3.11.1.3 DN Bridging

[Conditional: MFS, EOS, SMEO, PBX1] The EKTS DN Bridging function shall comply with the requirements of paragraph 3.8.5 Three-Way Calling (TWC).

3.11.1.4 Intercom Calling

[Conditional: MFS, EOS, SMEO, PBX1] The EKTS Intercom Calling feature shall not prevent the offering of a MLPP call to any of the parties involved in an intercom call.

3.11.1.5 Abbreviated Or Delayed Ringing Treatment On Incoming Calls

[Conditional: MFS, EOS, SMEO, PBX1] Incoming MLPP calls shall be considered as 'distinctive alerting' and shall not be affected by the Abbreviated or Delayed Ringing Treatment. Precedence Alerting (Table 5-4) shall be applied to the call DN appearance and the call handled as described in Paragraph 3.6, ISDN MLPP Basic Rate Interface. If the call is not answered and the EKTS-T1 time expires, the call shall be diverted to an operator. If Call Forwarding-No Reply is invoked by the called DN, then the call forwarding procedures of Paragraph 3.8.2.2 apply at the expiration of the EKTS-T1 timer.

3.11.1.6 Bridged Call Exclusion (BCE)

[Conditional: MFS, EOS, SMEO, PBX1] The Bridged Call Exclusion feature (Automatic or Manual) shall not degrade or prevent the MLPP interactions described in this section.

3.11.1.7 Non-ISDN Users

[Conditional: MFS, EOS, SMEO, PBX1] Non-ISDN users (analog phone) can be assigned as members of the EKTS group. The non-ISDN user will share a call appearance with other members of the EKTS group and shall be able to originate the authorized precedence level and receive all levels of precedence on that shared appearance.

3.12 Backward Compatibility

This section details the requirements for interoperability of the DSN utilizing the old cause values and precedence parameters. These requirements are only needed until all DSN switches have been upgraded with the T.619a signaling.

3.12.1 Precedence Parameter

[Conditional: MFS, EOS, SMEO, PBX1] New DSN switches must interoperate with both the current 1992/1994 ANSI T1.113 MLPP CCS7 Initial Address Message (IAM) which contains the precedence parameter six octet field shown in Figure 3-9 of this GSCR as well as the 1988 ANSI T1.113, paragraph 3.8 precedence parameter that are found in the Calling Party Category. The 1988 precedence values are:

1 – ROUTINE

2 – PRIORITY

3 – IMMEDIATE

4 – FLASH

5 – FLASH OVERRIDE

3.12.2 Cause Values & Location Codes

[Conditional: MFS, EOS, SMEO, PBX1] The supplement to ANSI T1.619-1992, ANSI T1.619a-1994, revised the standard so that the exchange-to-exchange signaling is consistent with ITU-T recommendations, which were approved after the publication of ANSI T1.619-1992.

The use of cause value #45, preemption, shall continue to be used as described in ANSI T1.619-1992. This shall not conflict with the use of cause values #8 & #9, as described in ANSI T1.619a-1994 (Supplement to ANSI T1.619-1992). The corresponding location code for each cause value (45, 8, and 9) shall operate as described in ANSI T1.619-1992 and ANSI T1.619a-1994.

3.13 Network Management Manual Controls

[Required: TS, EOS, MFS - Conditional: SMEO] Call gapping shall not apply to FLASH and FLASH OVERRIDE calls. In addition, FLASH and FLASH OVERRIDE calls shall be exempt from "Cancel to" (CANT) and "Cancel from" (CANF). See Section 9.6 for details.

3.14 Data Collection

[Required: EOS, SMEO, MFS] The settable fields for Call Detail Recording (CDR) shall be as shown in Section 9, Table 9-1. All DSN call data must identify the precedence level of the call.

SECTION 4 - Call Processing

4.0 Introduction

This section covers the call processing requirements of DSN switching systems. The section is modeled after the Telcordia GR-505-CORE, *Call Processing*, Issue 1, December 1997. It describes originating and terminating calls involving individual lines and DSN unique call processing associated with military unique features (MUFs). No feature or function specifically identified in this GSCR or in the referenced standards shall prevent the completion or connection of a PRIORITY or higher precedence call. Call processing includes the following subject areas:

- Origination Treatments
- Termination Treatments
- Release Treatment
- Interruption Treatment
- Routing
- Dual Homing
- Spill Forward Control
- User Access Line *call processing*
- PBX Access Lines
- Preemption In the Network
- Glare Resolution
- Code Interpretation
- Screening

The requirements in GR-505-CORE shall be followed for processing DSN ROUTINE calls. This section specifies the requirement for processing DSN Precedence Calls and other DSN unique call processing requirements.

4.1 Call Treatments

Call treatments describe the interactions between a local switching system and a line or trunk during call processing and explains associated system actions required. The treatments are: origination, termination, release, and interruption.

4.1.1 Origination Treatment

[Required: TS, EOS, MFS, SMEO, PBX1, PBX2] Origination covers processing a call from the detection of a seizure until either the call is abandoned or complete code information has been received. Release treatments for ISDN and CCS7 lines and trunks are not required on DSN

switching systems that do not include ISDN and CCS7 capabilities. DSN origination treatment shall be as specified in Telcordia Technologies GR-505-CORE, *Call Processing*, Issue 1, December 1997, paragraph 3 and all subparagraphs. In addition the following origination treatments are required.

4.1.1.1 Originating Busy

[Required: TS, EOS, MFS, SMEO, PBX1, PBX2] The originating line or trunk shall be marked originating busy when a seizure is recognized by the switch. Calls in an originating busy condition shall not be preempted until after the precedence level is determined. The precedence level shall be determined any time after the first digit is presented or dialed but no later than the last digit.

4.1.2 Termination Treatment

[Required: TS, EOS, MFS, SMEO, PBX1, PBX2] Termination covers processing a call from the point at which the system has received sufficient code information to determine the destination until either the call is answered and a transmission path is established, or until the appropriate treatment has been applied to calls that cannot be completed. Release treatments for ISDN and CCS7 lines and trunks are not required on DSN switching systems that do not include ISDN and CCS7 capabilities. DSN termination treatment shall be as specified in Telcordia Technologies GR-505-CORE, *Call Processing*, Issue 1, December 1997, paragraph 4 and all subparagraphs. In addition the following termination treatments are required.

4.1.2.1 Busy or Idle Status

[Required: TS, EOS, MFS, SMEO, PBX1, PBX2] Lines or trunks preempted and marked for reuse shall be marked busy at the precedence level of the preempting call.

4.1.3 Release Treatment

[Required: TS, EOS, MFS, SMEO, TS, PBX1, PBX2] Release treatment is the actions that the switching system shall take in response to disconnect signals when a call is in the talking state. DSN release treatment for reasons other than preemption shall be as specified in Telcordia Technologies GR-505-CORE, *Call Processing*, Issue 1, December 1997, paragraph 5. Release treatments for ISDN and CCS7 lines and trunks are not required on DSN switching systems that do not include ISDN and CCS7 capabilities.

4.1.4 Interruption Treatment

[Required: TS, EOS, MFS, SMEO, TS, PBX1, PBX2] Interruption treatment is the response to requests for interruption of a call in progress. DSN interruption treatment shall be as specified in Telcordia Technologies GR-505-CORE, *Call Processing*, Issue 1, December 1997, paragraph 6.

4.1.5 Connections

[Required: TS, EOS, MFS, SMEO, TS, PBX1, PBX2] DSN Switches shall provide switched service connections as specified in Telcordia Technologies GR-505-CORE, *Call Processing*, Issue 1, December 1997, paragraph 2.3 and all subparagraphs.

4.1.6 Class of Service

[Required: TS, EOS, MFS, SMEO, TS – Conditional: PBX1, PBX2] The switch shall provide classmarks to indicate each separate privilege, restriction, or special instruction for processing incoming and outgoing calls. The switch shall have the capability to assign classmarks in any combination to a single station line, access line, number code, trunk, or group of trunks. A minimum of 256 classmarks shall be provided.

4.2 Primary and Alternate Routing

[Required: TS, MFS] DSN tandem level switches shall be capable of routing all calls to a primary route and up to nine alternate routes. Each route shall have the capability of including a minimum of four (4) trunk groups or subtrunk groups for separately grouping various categories of traffic such as voice, data, satellite, and terrestrial transmission.

[Required: EOS, SMEO] DSN EOS and SMEO switches shall be capable of routing all calls to a primary route and to at least five (5) alternate routes with a minimum of one (1) trunk group per route and up to 96 trunk members per trunk group.

4.3 User Access Line Call Processing (Non-CCS/ISDN Type)

4.3.1 Ear & Mouth (E&M) Lead Signaling States

[Conditional: TS, EOS, SMEO, MFS, PBX1, PBX2]

The switch shall provide E&M lead signaling states as described in table 4-1.

4.3.2 Four-Wire Analog User Access Lines

[Conditional: TS, EOS, SMEO, MFS, PBX1, PBX2]

The call processing actions relative to four-wire user lines are described in Table 4-2, and will be the same for both Type I, Type II, and Type V E&M signaling. The switch shall recognize state changes on the four-wire user access line in accordance with the criteria shown in Table 4-2.

4.3.3 Two-Wire User Access Lines

[Required: EOS, SMEO, MFS, PBX1 – Conditional: PBX2]

The switch shall provide the call processing actions as described in Table 4-3. The electrical characteristics assume that the connected user terminal equipment meets or exceeds the specification in Part 68 of the Federal Communications Commission (FCC) rules.

Table 4-1. E&M Lead Signaling States

TABLE 4-1. E&M LEAD SIGNALING STATES	
E-Lead On-Hook Transitions	The DSN switch shall recognize or send an on-hook state, or the transition to the on-hook state, when: - Open (represented by a ground through 20K ohms of resistance or greater) is detected or sent on a Type I E-lead, OR - The E&SG lead loop is open (the full sensor voltage of the E-lead will be present) on a Type II E-lead.
E-Lead Off-Hook Transitions	The DSN switch shall recognize or send an off-hook state, or a transition to the off-hook state, when: - Ground (represented by a ground through a resistance of 150 ohms or less) is detected or sent on a Type I E-lead, OR - The E&SG lead loop is closed (The SG-lead will apply ground to the E-lead) on a Type II E-lead.
M-Lead On-Hook Transitions	The DSN switch shall recognize or send an on-hook state, or a transition to the on-hook state, when: - Ground (the voltage between the M-lead and ground will not exceed 1 volt) is detected or sent on a Type I M-lead, OR - The M&SB lead loop is open (the full sensor voltage of the M-lead will be present) on a Type II M-lead.
M-Lead Off-Hook Transitions	The DSN switch shall recognize or send an off-hook state, or the transition to the off-hook state, when: - Battery (in the range of -42.5 to -52.5 volts) is detected on the M-lead. The potential of the M-lead will not drop more than 2.5 volts under a 500 milliamp ere load on a Type I M-lead, OR - The M&SB lead loop is closed (the SB-lead will apply battery to the M-lead) on a Type II M-lead.

Table 4-2. Call Processing - Four-Wire User Access Lines

TABLE 4-2. CALL PROCESSING - FOUR-WIRE USER ACCESS LINES	
Origination of ROUTINE or Precedence Calls	The DSN switch shall accept call originations from a four-wire user access line when: - The station or transmission equipment requests service via an off-hook transition on its SIG OUT leads, AND - The DSN switch shall react by returning dial tone on its VF OUT leads toward the station or transmission equipment. The DSN SIG OUT leads remain on-hook. The station or transmission equipment then outpulses the called number (including any precedence digits) in DTMF on its VF OUT leads toward the DSN, AND - If the call is blocked or unable to complete, the DSN switch shall return the proper tone or announcement on its VF OUT leads toward the station

TABLE 4-2. CALL PROCESSING - FOUR-WIRE USER ACCESS LINES	
	or transmission equipment. The DSN SIG OUT leads remain on-hook, AND - If the call is completed, the DSN switch shall return answer supervision as an off-hook transition on its SIG OUT leads toward the station or transmission equipment. - Disconnect is indicated from the station and transmission equipment end by an on-hook transition on its SIG OUT leads exceeding 180 ms. The DSN expects the station and transmission equipment to provide a release guard interval of 600-800 ms before seizing the access line for another call, OR - If the four-wire access line is connected to a four-wire telephone and is allowed features invoked by switch hook flash (i.e., attendant recall, call waiting, three-way calling, conference, etc.), the disconnect window is extended to 2000 ms by the DSN.
Termination of ROUTINE Calls	The DSN switch shall terminate ROUTINE calls to four-wire user access lines by: - Returning ring back-tone to the calling party, AND - Seizing the station or transmission equipment with an off-hook transition on the DSN SIG OUT leads, AND - Applying ROUTINE alerting as on and off-hook transitions on the DSN SIG OUT leads. AND - The station or transmission equipment returns answer supervision as an off-hook transition on its SIG OUT leads to the DSN when the called user answers. - Disconnect is indicated from either the DSN or station equipment end by an on-hook transition on the respective SIG OUT leads. The DSN switch shall invoke timed disconnect (15 seconds) on terminating calls to user access lines if the calling user remains off-hook after the access line has gone on-hook. The DSN switch shall provide a release guard interval of 600-800 ms before terminating another call to the access line.
Termination of Precedence Calls (Access Line Idle)	The DSN switch shall terminate precedence calls to an idle four-wire user access line by: - Returning precedence ringback-tone to the calling user, AND - Seizing the station or transmission equipment with an off-hook transition on the DSN SIG OUT leads, AND - Applying precedence alerting as on-/off-hook transitions on the DSN SIG OUT leads until the called party answers or the call is abandoned. AND - The station or transmission equipment returns answer supervision as an off-hook transition on its SIG OUT leads when the called user answers, AND - Disconnect is indicated from either the DSN or station equipment end by an on-hook transition on the respective SIG OUT leads. The DSN switch shall invoke timed disconnect (15 seconds) on terminating calls to user access lines.

TABLE 4-2. CALL PROCESSING - FOUR-WIRE USER ACCESS LINES	
Termination of Precedence Calls (Access Line Busy)	The DSN switch shall preempt a call in progress and terminate a precedence call to a busy four-wire user access line by: - Applying a 340 to 350 ms on-hook transition toward the station or transmission equipment on the DSN SIG OUT leads. AND - The DSN then applies preemption notification tone to its VF OUT leads until an on-hook transition is detected on the station and transmission equipment SIG OUT leads, AND - When the station and transmission equipment is on-hook, the DSN switch shall terminate the preempting call as previously described for the "Access Line Idle" call case, using precedence alerting, if the preemption was for the affected four-wire access line.

Table 4-3. Call Processing Two-Wire User Access Lines

Table 4-3. CALL PROCESSING TWO-WIRE USER ACCESS LINES	
Idle State	While in the idle state the DSN switch shall: - Provide resistance ground of a nominal 200 ohms on the tip conductor, AND - Provide resistance battery of -21.5 to -56.5 volts dc on the ring conductor. The DSN expects the station equipment: - To provide a dc resistance across the tip and ring conductors, or from either conductor to ground, greater than 15,000 ohms.
Origination of ROUTINE Precedence Calls	The DSN switch shall accept call originations from two-wire or user access lines when: - The station equipment requests service by placing a dc resistance less than 2310 ohms (including station equipment resistance) across the T and R leads, AND - The DSN switch shall react by returning dial-tone on the T and R leads when it is ready to receive address digits, AND - The station equipment sends the called number (including any precedence digits) in either DP or DTMF mode. AND - If the call is blocked or unable to be completed, the DSN switch shall return the proper tone or announcement toward the station equipment, AND - The DSN shall not return reverse battery supervision when the called user answers on the two-wire user access line.
	- Disconnect shall be detected by the DSN switch if the dc resistance across the T and R leads exceeds 10,000 ohms for greater than 180 ms. This applies unless the access line is allowed special features that are activated by switchhook flash (i.e., attendant recall, call waiting, three-way calling, conference, etc.). If the switchhook flash is expected, the disconnect detection interval is extended to 2000 ms by the DSN switch.
Termination of ROUTINE and	The DSN switch shall terminate ROUTINE and higher precedence calls to two-

Table 4-3. CALL PROCESSING TWO-WIRE USER ACCESS LINES	
Precedence Calls (Access Line Idle)	wire users access lines by: - Returning ringback-tone toward the calling user, AND - Applying ringing generator toward the station equipment as an ac voltage of 92.5 ± 32.5 volts at 20 Hz ± 3 Hz, superimposed on -21.5 to -56.5 volts dc, AND - The cadence of the ringing toward the station equipment is 2 seconds ON, followed by 4 seconds OFF for ROUTINE calls. For precedence calls, ringing toward the station equipment is 1.65 seconds ON, followed by 3.5 seconds OFF. The appropriate cadence is continued until the called party answers or the calling party goes on-hook AND - While in the ringing state, the station equipment must: - Not allow more than 3 mA of dc current to flow. - Maintain an impedance across the T and R leads greater than 1400 ohms. - Maintain a dc resistance across the T and R leads, or from either T and R to ground, greater than 10,000 ohms, AND - Removing ringing generator (ring trip): - Shall occur when a dc resistance less than 2310 ohms (including station resistance) is applied across the T and R leads. - May occur during the ringing generator on interval. The DSN switch shall remove the ringing voltage within 200 ms after detecting ring trip. - May occur during the ringing OFF (or silent) interval. Ringing transient and timing parameters are: - Off-hook transitions from the station equipment less than 12 ms in duration shall be ignored and shall not cause ring trip,
	AND - If ring trip occurs during the ringing generator ON period, the DSN switch shall remove ringing generator within 200 ms, AND - Ring trip transitions with the DSN line interface circuitry shall not cause an open interval (or battery feed interruption) exceeding 20 ms, AND - Ring trip without sustained answer supervision from the station equipment shall cause ringback-tone to remain toward the calling user. Upon detection of a valid answer from the station equipment, the DSN switch shall: - Remove ringback-tone toward the calling user, AND - Cut through the calling and called user. Disconnect is indicated from the station equipment when the DC resistance across the T and R leads exceeds 10,000 ohms for: - 180 ms if the calling user is also on-hook, OR - 15 seconds if the calling user is still off-hook. If the called user goes off-hook during this interval, normal conversation will continue, OR
	- 2000 ms if switchhook flash activated features are allowed.
Termination of Precedence Calls	The DSN switch shall preempt a call in progress and terminate a precedence call to

Table 4-3. CALL PROCESSING TWO-WIRE USER ACCESS LINES	
(Access Line Busy)	a busy two-wire user access line by: - Applying preemption notification tone to the T and R leads until the subscriber equipment goes on-hook, AND - Terminating the call as previously described for a precedence call to an idle two-wire user access line, if the preemption was for the affected two-wire access line.

4.3.4 Termination to Analog Lines

4.3.4.1 Busy/Idle Status

[Required: EOS, SMEO, MFS, PBX1] Lines or trunks preempted and marked for reuse shall be marked busy at the precedence level of the preempting call.

4.4 DSN Interswitch Trunk(IST) Call Processing (Non-CCS/ISDN Type)

4.4.1 Originating Call Processing

[Required: TS, EOS, SMEO, MFS]

The call processing actions for originating calls to the DSN from on-net trunks are shown in Table 4-4.

Table 4-4. Originating Call Processing Toward DSN From DSN ISTs

TABLE 4-4. ORIGINATING CALL PROCESSING TOWARD DSN FROM DSN ISTs	
Idle State	The DSN switch shall assume an idle state, on its SIG IN leads when: - Open (represented by a ground through 20K ohms of resistance or greater) is present on a Type I E-lead, OR - The E&SG lead loop is open (the full sensor voltage of the E-lead is present) on a Type II E-lead, OR - The M-lead is open (the full sensor voltage of the M-lead is present) on a Type V M-lead, OR - The A and B bits of the received channel on the PCM-24 DIU are a "0", OR

TABLE 4-4. ORIGINATING CALL PROCESSING TOWARD DSN FROM DSN ISTs	
	- The channel 16 supervisory bits indicate on-hook for the channel on a PCM-30 DIU.
Seizure by Connecting Office	The DSN switch shall recognize a call for service, or a transition to the off-hook state, on its SIG IN leads when: - Ground (represented by a ground through a resistance of 150 ohms or less) is detected on a Type I E-lead, - The E&SG lead loop is closed (the SG-lead will apply ground to the E-lead) on a Type II E-lead, OR - Ground is detected on a Type V M-lead, OR - The A and B bits of the received channel on the PCM-24 DIU are a "1", OR - The channel 16 supervisory bits indicate off-hook for the channel on a PCM-30 DIU.
Reaction by DSN Switch	When ready to receive address digits, the DSN switch shall return, as an off-hook transition on its SIG OUT leads, a wink-start or delay-dial signal, depending on the requirements of the connecting office.
Outpulsing of the Called Number by the Connecting DSN Switch	The distant office outpulses in the MF or DTMF mode. The address information required to complete the call shall be in accordance with the outpulsing formats found in tables 4-9 and 4-10.
Call Completion by DSN Switch	The DSN switching entity shall complete, or block, the call based on translation of the called number. If the call is blocked or reaches a busy station not preemptable by the calling station, the DSN switch shall return the proper tone or announcement via its VF OUT leads. On-hook supervision shall remain on the DSN switch SIG OUT leads. If the desired station is idle, the DSN switch shall return ROUTINE or PRECEDENCE ringback tone on its VF OUT leads. When the called station answers, answer supervision shall be returned as an off-hook transition on the DSN switch SIG OUT leads.
Preemption by Connecting Office (Unanswered Call)	Preemption by the connecting office on an unanswered call shall appear as a 328 to 362 ms on-hook transition, followed by off-hook supervision and another origination by the connecting office if the trunk is reused.

TABLE 4-4. ORIGINATING CALL PROCESSING TOWARD DSN FROM DSN ISTs	
Preemption for Reuse by DSN Switch (Unanswered Call)	The DSN switch shall preempt for reuse an unanswered incoming call from the connecting office by returning on its SIG OUT leads: - An off-hook transition of 95 to 105 ms, AND - Followed by an on-hook transition of 340 to 350 ms, AND - Followed by off-hook supervision.
Preemption Not for Reuse by DSN Switch (Unanswered Call)	The DSN switch expects the connecting office to make a transition to the on-hook state, followed by a wink-start or delay-dial signal when it is ready to accept the preempting call. Call processing from this point is the same as that described for "TERMINATING CALL PROCESSING FROM DSN". If a preemption is required on an unanswered incoming call from the connecting office, and the trunk shall not be reused, the DSN switch shall return on its SIG OUT leads: - An off-hook transition of 95 to 105 ms, AND - Followed by an on-hook transition of 340 to 350 ms, AND - Followed by an off-hook transition of 95 to 105 ms, AND - Followed by on-hook supervision The DSN switch expects the connecting office to make a transition to the on-hook state.
Preemption for Reuse by the Connecting Office (Answered Call)	The connecting office may preempt for reuse an answered call. The DSN switch shall detect a preemption of this type when: - A 328 to 362 ms on-hook transition is detected on its SIG IN leads, AND - Followed by off-hook supervision,
Preemption Not for Reuse by the Connecting Office (Answered Call)	The connecting office may preempt not for reuse an answered call. The DSN switch shall detect a preemption of this type when: - A 328 to 362 ms on-hook transition is detected on its SIG IN leads, AND - Followed by a 95 to 105 ms off-hook transition, AND - Followed by on-hook supervision. The DSN switch shall react by preempting "not for reuse" the associated access line or trunk involved in the call, and returning on-hook supervision toward the connecting office.

TABLE 4-4. ORIGINATING CALL PROCESSING TOWARD DSN FROM DSN ISTs	
Preemption for Reuse by the DSN Switch (Answered Call)	The DSN switch shall initiate a preemption of this type by: - Returning an on-hook transition of 340 to 350 ms toward the connecting office on the DSN switch SIG OUT leads, AND The DSN switch expects the connecting office to make a transition to the on-hook state, followed by a wink-start or delay-dial signal when it is ready to accept the preempting call. Call processing from this point is the same as that described for "TERMINATING CALL PROCESSING FROM DSN".
Preemption Not for Reuse by the DSN Switch (Answered Call)	If a preemption is required on an answered call from the connecting office, and the trunk shall not be reused, the DSN switch shall return on its SIG OUT leads: - An on-hook transition of 340 to 350 ms, AND - Followed by an off-hook transition of 95 to 105 ms, AND The DSN switch expects the connecting office to make a transition to on-hook supervision.
Disconnect (Unanswered Call)	The DSN switch shall disconnect unanswered calls, and preemptions not for reuse on unanswered calls, if an on-hook transition exceeding 362 ms is received on the DSN switch SIG IN leads.
Disconnect (Answered Call)	The DSN switch shall provide calling party hold and timed disconnect. On-hook transitions exceeding 362 ms from the connecting office shall be considered a disconnect even though the called station is still off-hook. Calling party release shall prevail, and the DSN switch shall return on-hook supervision toward the connecting office.
	On-hook transitions from the called station exceeding 362 ms shall cause timed disconnect timing to commence. If the on-hook transition is less than 15 seconds, followed by off-hook supervision, conversation shall continue. If the on-hook transition exceeds 15 seconds, disconnect is assumed and the DSN switch shall commence permanent signal treatment on the incoming trunk from the connecting office.
Guard Interval	The DSN switch expects the connecting office to invoke a guard timing interval to allow sufficient time to release the call. For a trunk using terrestrial facilities, this guard interval must be 600 to 800 ms with a nominal value of 750 ms. For a trunk using satellite facilities, this guard interval must be 1050 to 1250 ms.

4.4.2 Terminating Call Processing

[Required: TS, EOS, SMEO, MFS]

The call processing actions for terminating calls from the DSN to on-net trunks are shown in Table 4-5.

Table 4-5. Terminating Call Processing From DSN TO DSN ISTs

TABLE 4-5. TERMINATING CALL PROCESSING FROM DSN TO DSN ISTs	
Idle State	The DSN switch shall present an idle state on its SIG OUT leads when: - Ground (the voltage between the M-lead and ground shall not exceed 1 volt) is sent on a Type I M-lead, OR - The M&SB lead loop is open (the full sensor voltage of the M-lead shall be present) on a Type II M-lead, OR - The E-lead is open (the full sensor voltage of the E-lead shall be present) on a Type V E-lead, OR - The A and B bits of the transmitted channel on the PCM-24 DIU are a "0", OR - The channel 16 supervisory bits indicate on-hook for the channel on a PCM-30 DIU.
Seizure by the DSN Switch	The DSN switch shall initiate a call for service on its SIG OUT leads as an off-hook transition indicated by: - Battery (in the range of -42.5 to -52.5 volts) is sent on the M-lead. The potential of the M-lead shall not drop more than 2.5 volts under a 500 milliampere load on a Type I M-lead, OR - Closing the M&SB lead loop (the SB-lead shall apply battery to the M-lead) on a Type II M-lead, OR - Ground is sent on a Type V E-lead, OR - Setting the A and B bits of the transmitted channel on the PCM-24 DIU to a "1", OR - Changing the supervisory bits on channel 16 to indicate off-hook supervision for the channel on a PCM-30 DIU.
Reaction by the Connecting Office	The DSN switch expects the connecting office, when ready to receive address digits, to return a delay-dial or wink-start signal as an off-hook transition detected by the DSN switch on its SIG IN leads.
Glare Resolution	Simultaneous seizure by the DSN switch and the connecting office results in a condition called "glare." The DSN switch shall resolve a glare condition depending on whether the trunk is wink-start or delay-dial, and whether it is to hold or release, when glare is detected, reselect once in the circuit same trunk group. If no circuits are idle or preemptable, the DSN switch shall route advance. If a circuit is idle or preemptable and the failure occurs on the retrial, the DSN switch shall route advance.

TABLE 4-5. TERMINATING CALL PROCESSING FROM DSN TO DSN ISTs	
Fault Detection and Retrial	The DSN switch shall detect fault conditions when terminating calls to the connecting office and react by reselecting another trunk.
Outpulsing of the Called Number by DSN Switch	The DSN switch outpulses in the MF or DTMF mode. The address information required to complete the call shall be in accordance with the outpulsing formats found in tables 4-9 and 4-10.
Call Completion by the Connecting Office	The connecting switching entity must complete, or block, the call based on translation of the called number. If the call is blocked or reaches a busy station not preemptable by the calling station, the connecting office must return the proper tone or announcement to the DSN switch VF IN leads. On-hook supervision must remain on the DSN switch SIG IN leads. If the desired station is idle, the connecting office must return ROUTINE or PRECEDENCE ringback tone to the DSN switch VF IN leads. When the called station answers, answer supervision must be returned as an off-hook transition on the DSN switch SIG IN leads.
Preemption by the DSN Switch (Unanswered Call)	Preemption by the DSN switch on an unanswered call shall appear as a 340 to 350 ms on-hook transition, followed by off-hook supervision and another origination by the DSN switch if the trunk is reused.
Preemption for Reuse by the Connecting Office (Unanswered Call)	The connecting office may preempt for reuse an unanswered outgoing call from the DSN switch by returning on the DSN switch SIG IN leads: - An off-hook transition of 95 to 105 ms, AND - Followed by an on-hook transition of 328 to 362 ms, AND - Followed by off-hook supervision The DSN switch shall make a transition to the on-hook state, followed by a wink-start or delay-dial signal when it is ready to accept the preempting call. Call processing from this point is the same as that described for "ORIGINATING CALL PROCESSING TOWARD DSN".
Preemption Not for Reuse by the Connecting Office (Unanswered Call)	If a preemption is required by the connecting office on an unanswered outgoing call from the DSN switch, and the trunk shall not be reused, the connecting office must return on the DSN switch SIG IN leads: - An off-hook transition of 95-105 ms, AND - Followed by an on-hook transition of 328 to 362 ms, AND - Followed by an off-hook transition of 95 to 105 ms, AND - Followed by on-hook supervision The DSN switch shall make a transition to the on-hook state.

TABLE 4-5. TERMINATING CALL PROCESSING FROM DSN TO DSN ISTs	
Preemption for Reuse by the Connecting Office (Answered Call)	The connecting office may preempt for reuse an answered call. The DSN switch shall detect a preemption of this type when: - A 328 to 362 ms on-hook transition is detected on its SIG IN leads, AND - Followed by off-hook supervision. The DSN switch shall react by preempting "not for reuse" the associated access or trunk involved in the call. The DSN switch shall make an on-hook transition toward the connecting office, followed by a wink-start or delay-dial signal when it is conditioned to receive digits. Call processing from this point is the same as described for "ORIGINATING CALL PROCESSING TOWARD DSN".
Preemption Not for Reuse by the Connecting Office (Answered Call)	The connecting office may preempt not for reuse an answered call. The DSN switch shall detect a preemption of this type when: - A 328 to 362 ms on-hook transition is detected on its SIG IN leads, AND - Followed by a 95 to 105 ms off-hook transition, AND - Followed by on-hook supervision. The DSN switch shall react by preempting "not for reuse" the associated access line or trunk involved in the call, and returning on-hook supervision toward the connecting office.
Preemption for Reuse by the DSN Switch (Answered Call)	The DSN switch may preempt for reuse an answered call. The DSN switch shall initiate a preemption of this type by: - Returning an on-hook transition of 340 to 350 ms toward the connecting office on the DSN switch SIG OUT leads, AND - Followed by off-hook supervision. The DSN switch expects the connecting office to make a transition to the on-hook state, followed by a wink- start or delay-dial signal when it is ready to accept the preempting call. Call processing from this point is the same as previously described.
Preemption Not for Reuse by the DSN Switch (Answered Call)	If a preemption is required on an answered call to the connecting office, and the trunk shall not be reused, the DSN switch shall return on its SIG OUT leads: - An on-hook transition of 340 to 350 ms, AND - Followed by an off-hook transition of 95 to 105 ms, AND - Followed by on-hook supervision. The DSN switch expects the connecting office to make a transition to on-hook supervision. -
Disconnect (Unanswered Call)	Unanswered calls, and preemptions not for reuse or unanswered calls, shall be disconnected by DSN switch with an on-hook transition on the DSN switch SIG OUT leads.

TABLE 4-5. TERMINATING CALL PROCESSING FROM DSN TO DSN ISTs	
Disconnect (Answered Call)	The DSN switch shall provide calling party release and timed disconnect. - On-hook transitions exceeding 362 ms from the DSN switch must be considered a disconnect by the connecting office even though the called station is still off-hook. Calling party release shall prevail and the connecting office must return on-hook supervision toward the DSN switch. - On-hook transitions from the called station exceeding 362 ms shall cause timed disconnect timing to commence. If the on-hook transition is less than 15 seconds, followed by off-hook supervision, conversation shall continue. If the on-hook transition exceeds 15 seconds, disconnect is assumed and the DSN switch shall return on-hook supervision towards the connecting office on the DSN switch SIG OUT leads.
Guard Interval	The DSN switch shall invoke a guard-timing interval to allow sufficient time for the connecting office to release the call. - For terrestrial facilities the guard interval shall be 600-800 ms (nominal value of 750 ms). For a trunk using satellite facilities, this guard interval shall be 1050 to 1250 ms.

4.5 Code Interpretation

4.5.1 Defense Switched Network World Wide Numbering and Dialing Plan

4.5.1.1 DSN User Dialing.

[Required: TS, EOS, SMEO, MFS, PBX1] The switch shall operate with the dialing format illustrated in Table 4-6, DSN User Dialing Format. The parts shown in parentheses ( ) are not dialed by the DSN user on all calls.

Table 4-6. DSN User Dialing Format

Access Digit	Precedence or Service Digit	Route Code	Area Code	Switch Code	Line Number
(N)	(P or S)	(1X)	(KXX)	KXX	XXXX

Where:

P is any precedence digit 0 - 4 and will be used on rotary-dial or 12-button DTMF keysets.

S is the service digit 5 - 9.

N is any digit 2 - 9.

X is any digit 0 - 9.

K is any digit 2 – 8.

NOTE: (1) Digits shown in parentheses are not dialed by the DSN user on all calls

(2) The Access Digit plus the Precedence or Service Digit constitute the Access Code

4.5.1.2 Interswitch and Intraswitch Dialing.

[Required: TS, EOS, SMEO, MFS, PBX1 - Conditional: PBX2] Seven-digit intraswitch dialing options as well as 7-and 10-digit interswitch dialing shall be supported by DSN Switches.

4.5.1.2.1 Seven-Digit Dialing.

[Required: TS, EOS, SMEO, MFS, PBX1] Seven-digit dialing shall consist of using the seven digits of the switch code and line number to establish either inter- or intra-switch calls within the same numbering plan area. Number assignments for this plan shall be of the form KXX-XXXX, where X is any digit 0-9 and K is any digit 2 – 8. The specific KXX of each switch will be assigned by DISA to preclude conflicts with other switch codes. Access to the local attendant shall be obtained by dialing 0. DSN ROUTINE 7-digit inter- or intra-switch calls are initiated by dialing the appropriate sequence of (1X) KXX-XXXX or 94 (1X) KXX-XXXX. DSN calls above ROUTINE precedence are initiated by the appropriate sequence of 9P (1X) KXX-XXXX where P is the precedence digit (0, 1, 2, or 3). Access to other Government and/or commercial services is obtained by dialing 9 followed by the appropriate service digit(s).

4.5.1.2.2 Ten-Digit Dialing.

[Required: TS, EOS, SMEO, MFS, PBX1] Ten-digit dialing shall consist of using 10 digits comprising the area code, switch code, and line number to establish inter-switch calls where the number plan area of the calling party is different from the number plan area of the called party.

Number assignments for this plan shall be of the form KXX-KXX-XXXX, where K is any digit 2-8, and X is any digit 0-9. DSN ROUTINE 10-digit inter-switch calls are initiated by dialing the appropriate sequence of (1X) KXX-KXX-XXXX or 94 (1X) KXX-KXX-XXXX. DSN calls above ROUTINE precedence are initiated by the appropriate sequence of 9P (1X) KXX- KXX-XXXX where P is the precedence digit (0, 1, 2, or 3). Access to other Government and/or commercial services is obtained by dialing 9 followed by the appropriate service digit(s).

4.5.1.3 Access Code.

[Required: TS, EOS, SMEO, MFS, PBX1] The access code shall include the access digit, followed by the precedence digit or the service digit.

4.5.1.3.1 Access Digit

[Required: TS, EOS, SMEO, MFS, PBX1] The access digit (e.g., 9) shall provide the indication to the switch that the digits that follow will indicate either DSN call precedence, selected egress to the services of other systems or networks, or selected access to special DSN features, such as individual trunk tests.

4.5.1.3.2 Precedence Digit

[Required: TS, EOS, SMEO, MFS, PBX1] The precedence digit (0, 1, 2, 3, or 4) shall permit a DSN user to dial an authorized DSN precedence level from properly classmarked 12-button telephone instruments. When the 7-digit intraswitch dialing option is used, it is not necessary to dial or key the precedence access digit for ROUTINE calls. The assignment of precedence digits is shown in Table 4-9.

4.5.1.3.3 Service Digits

[Required: TS, EOS, SMEO, MFS, PBX1] The service digits, 5 through 9, shall provide information to the switch to connect calls to Government or public telephone services or networks that are not part of the DSN. The DSN switch will normally collect the access code and all routing and address digits before attempting to route a call to prevent numbering ambiguities between the access codes and the 2-digit abbreviated dial codes. The assignment of service access codes is shown in Table 4-7.

Table 4-7. Precedence And Service Access Codes

1. Assignments for rotary dial, 12-button telephone keysets are:

Access Digit	Precedence Digit	
e.g., 9	0	DSN - FLASH OVERRIDE Precedence
e.g., 9	1	DSN - FLASH Precedence
e.g., 9	2	DSN - IMMEDIATE Precedence
e.g., 9	3	DSN - PRIORITY Precedence
e.g., 9	4	DSN - ROUTINE Precedence

2. Assignments for 15/16 Button Keysets are:

FO	DSN - FLASH OVERRIDE Precedence
F	DSN - FLASH Precedence
I	DSN - IMMEDIATE Precedence
P	DSN - PRIORITY Precedence
(94)	DSN - ROUTINE Precedence

3. Assignments for Service Access Codes are:

Access Digit	Service Digit	
e.g., 9	5	Off-net 700 Services
e.g., 9	6	Not Assigned
e.g., 9	7	DSN CONUS FTS
e.g., 9	8	Not Assigned
e.g., 9	9	Local Public Telephone Network (PTN)

4.5.1.4 Route Code

[Required: EOS, SMEO, MFS, PBX1] The route code is a special purpose DSN code that permits the customer to inform the switch of special routing or termination requirements. At the present time, the route code is used to determine whether a call will use circuit switched data or voice-grade trunking. It may be used to disable echo suppressers and cancelers, and override satellite link control. It is not necessary to dial a route code for voice calls if no special features are required. The first digit of the route code is a necessary part of the dialing plan to inform the switch that the next digit, the route digit, gives network instructions for specialized routing. The route code assignments are as shown in Table 4-8.

Table 4-8. Route Code Assignment

Route Code	Route Code Use
10	Voice Call (default)
11	Circuit Switched Data
12	Satellite Avoidance
13	Reserved
14	Reserved
*5	Hotline (off-hook) voice grade (switch inserted)
*6	Hotline (off-hook) data grade (switch inserted)
17	Reserved
18	Reserved
19	Reserved

* The user does not dial these route codes. The switch shall automatically dial hotline calls when an off-hook condition occurs and out pulse the appropriate route digit (i.e. 5 or 6).

4.5.1.5 Area Code

[Required: TS, EOS, SMEO, MFS, PBX1] The area code indicates the geographical part of the world or tactical unit (numbering plan area) in which a DSN user is assigned. It is a 3-digit code of the form KXX assigned by DISA and is used only when addressing a user outside of the originator's own numbering plan area.

4.5.1.6 Switch Code

[Required: TS, EOS, SMEO, MFS, PBX1] The switch code indicates the location of a switching center within a numbering plan area. It is a 3-digit code (see table 4-9) in the form KXX assigned by DISA. This code must be dialed to address another switch in the same numbering plan area.

4.5.1.7 Line Number

[Required: TS, EOS, SMEO, MFS, PBX1] The line number is the switch unique DSN user station identification. It is of the form XXXX. The line number groups cannot be assigned arbitrarily for each switch. The line number group assignments must be coordinated with the local connecting DSN or the host nation Public Telephone and Telegraph (PTT) and with DISA.

4.5.1.8 Emergency Service 911 Conflict Resolution

[Required: MFS, EOS, SMEO, PBX1] To prevent conflicts between 911 (emergency service) and 91-11-(KXX)-KXX-XXXX (Flash data call), the switch shall be programmed in such a manner that after 911 is dialed and no other digits are received within 4 seconds (or after a # is dialed), the call will be treated as an emergency service call (911) and immediately processed. If additional digits are received within the 4-second time period, the call will be treated as a non-emergency call and handled appropriately.

4.5.2 DSN Switch Outpulsing Digit Formats

The switch outpulsing digit format for Multi-Frequency R1 (MF R1) and Dual Tone Multi-Frequency (DTMF) Signaling shall be as shown in tables 4-9 **[Required: TS, EOS, MFS - Conditional: SMEO, PBX1]** and 4-10 **[Required: TS, EOS, MFS, SMEO – Conditional: PBX1]** .

Table 4-9. DSN Switch MFR1 Outpulsing Digit Format

	Precedence Digit	Route Digit	Route Control Digit	Area Code	Switch Code	Line Number	
[KP]	**P**	**X**	**(Y)**	**(KXX)**	**KXX**	**XXXX**	**[S/T]**

[Required: TS, EOS, MFS - Conditional: SMEO, PBX1]

Where: P is any digit 0 – 4

X is any digit 0 – 9

Y is the digit 0 – 3 (Required only for TS and MFS switches) See Note

K is any digit 2 – 8

KP is the key pulse tone for MF(R1) 2/6 signaling inserted by the switch

S/T is the end of signaling tone for MF(R1) 2/6 signaling inserted by the switch

Note: These switches shall have the option to send or receive a call with or without the route control digit. Digits shown in parenthesis () are not present on all calls.

Table 4-10. DSN Switch DTMF Outpulsing Digit Format

Precedence Digit	Route Digit	Area Code	Switch Code	Line Number
(P)	**(X)**	**(KXX)**	**KXX**	**XXXX**

[Required: TS, EOS, MFS, SMEO – Conditional: PBX1]

Where: P is any digit 0 - 4 (standard DTMF digit format) or A, B, C, D

(Precedence DTMF digit format)

X is any digit 0 – 9

K is any digit 2 - 8

0=Flash Override, 1=Flash, 2=Immediate, 3= Priority, 4= Routine

A= Flash Override, B= Flash, C= Immediate, D= Priority

Note: Digits shown in parenthesis ( ) are not present on all calls. The switch shall have the ability to send or receive a call with or without the route digit. Standard digit format only required for TS, EOS, and MFS.

Specific requirements for DTMF signaling can be found in Section 5.4.2

4.5.2.1 Route Control Digit (RCD) [Inclusive thru 4.5.2.1.9]

[Required: TS, MFS] The DSN RCD provides optimum assurance, consistent with cost, for call completion, particularly of high precedence calls. Survivability is attained by exploiting the flexibility and efficiency of traffic routing capability inherent in the design of the switching system. The following assumptions/requirements apply:

a. Distribution of switching centers is consistent with traffic density and availability of transmission facilities.

b. All DSN MFS switching centers have the same classification in the network and generally have the same operating capabilities. Each MFS switching center serves originating, terminating, and tandem traffic, exercises preemption, and provides automatic alternate routing.

c. Each DSN MFS/TS switching center is provided with inter-machine trunks from several of its most immediate surrounding centers. Direct trunk groups are established between each center and other centers to provide improved accessibility and traffic handling.

d. Use of this feature shall be an additional functionality in call processing and shall not affect the call processing and treatment of calls that are class-marked for Method 1 and/or Method 2 trunk route selection for precedence calls above ROUTINE.

e. Use of this feature shall not affect other routes or their associated attributes that are not assigned the RCD.

f. Use of this feature in the same switching center shall not restrict the use of other routes without the RCD.

g. Use of this feature shall be in accordance with the specified routing procedures for "exterior" and "interior" routing schemes as a minimum.

h. Use of this feature shall not affect automatic and manual network management controls.

4.5.2.1.1 Conceptual Backbone Network Structure.

a. DSN Backbone Theater/home Grid Pattern. The fundamental element of the DSN is a theater/home grid network of switching centers that are assigned as a common backbone surrounded and directly connected to a destination switching center as shown in Figure 4-1. The number of switching centers in the grid varies with its geographical location and traffic distribution. The grid for any other switching center in Figure 4-1 has its own set of switching centers constituting an array that forms the basic polygrid pattern shown in Figure

4-2. The hexagonal grid pattern is similar for all switching centers except for peripherally located centers that have less than a full pattern.

b. Long Haul Pattern**.** After the pattern of theater/home grids has been established, a pattern of long-haul trunking is developed to minimize the number of interswitch trunks that must be connected in tandem to complete long-distance calls. These trunk groups are established when there is sufficient calling between switching center pairs to economically justify a direct path.

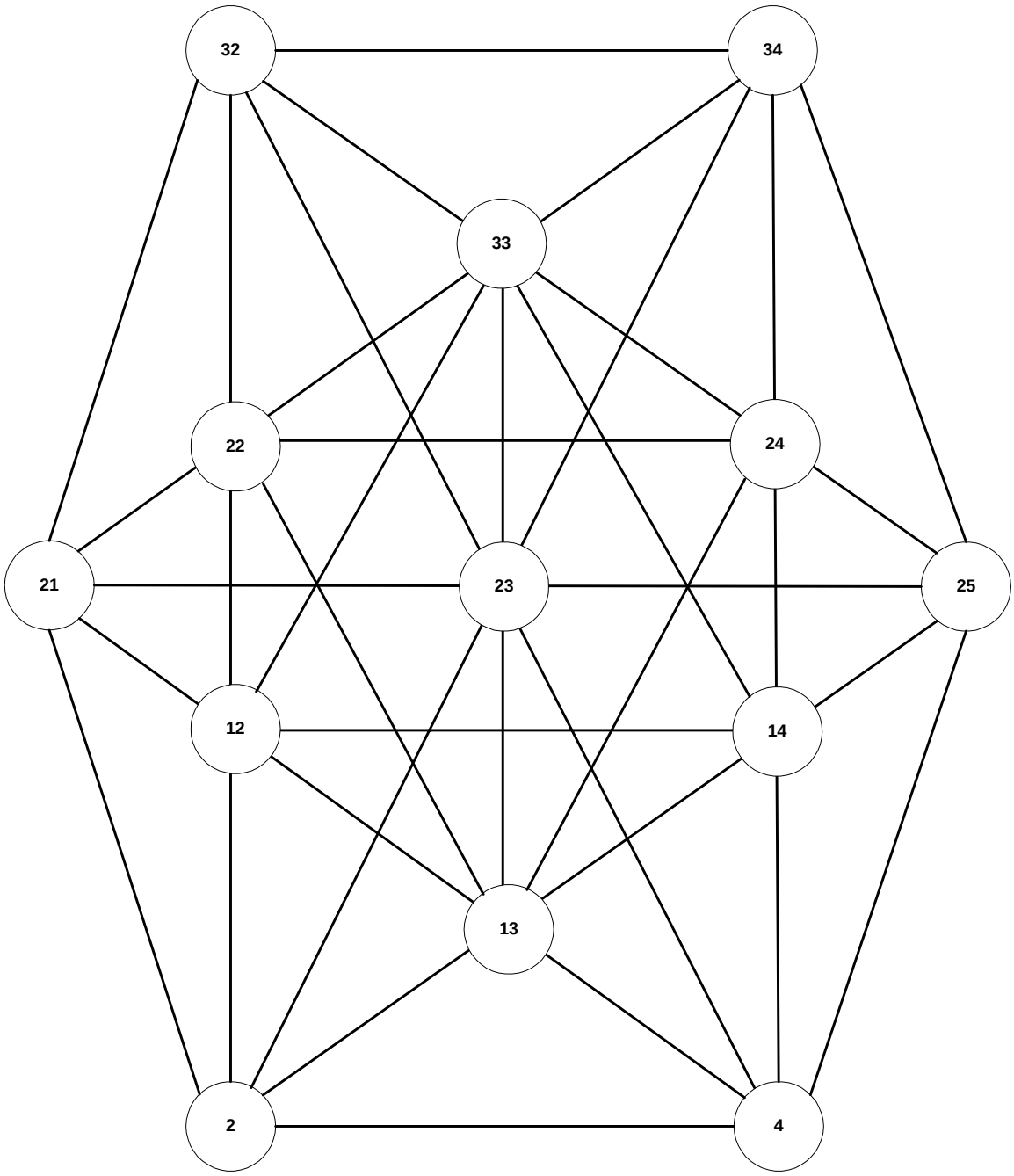

Figure 4-1. Theater/Home Grid Array

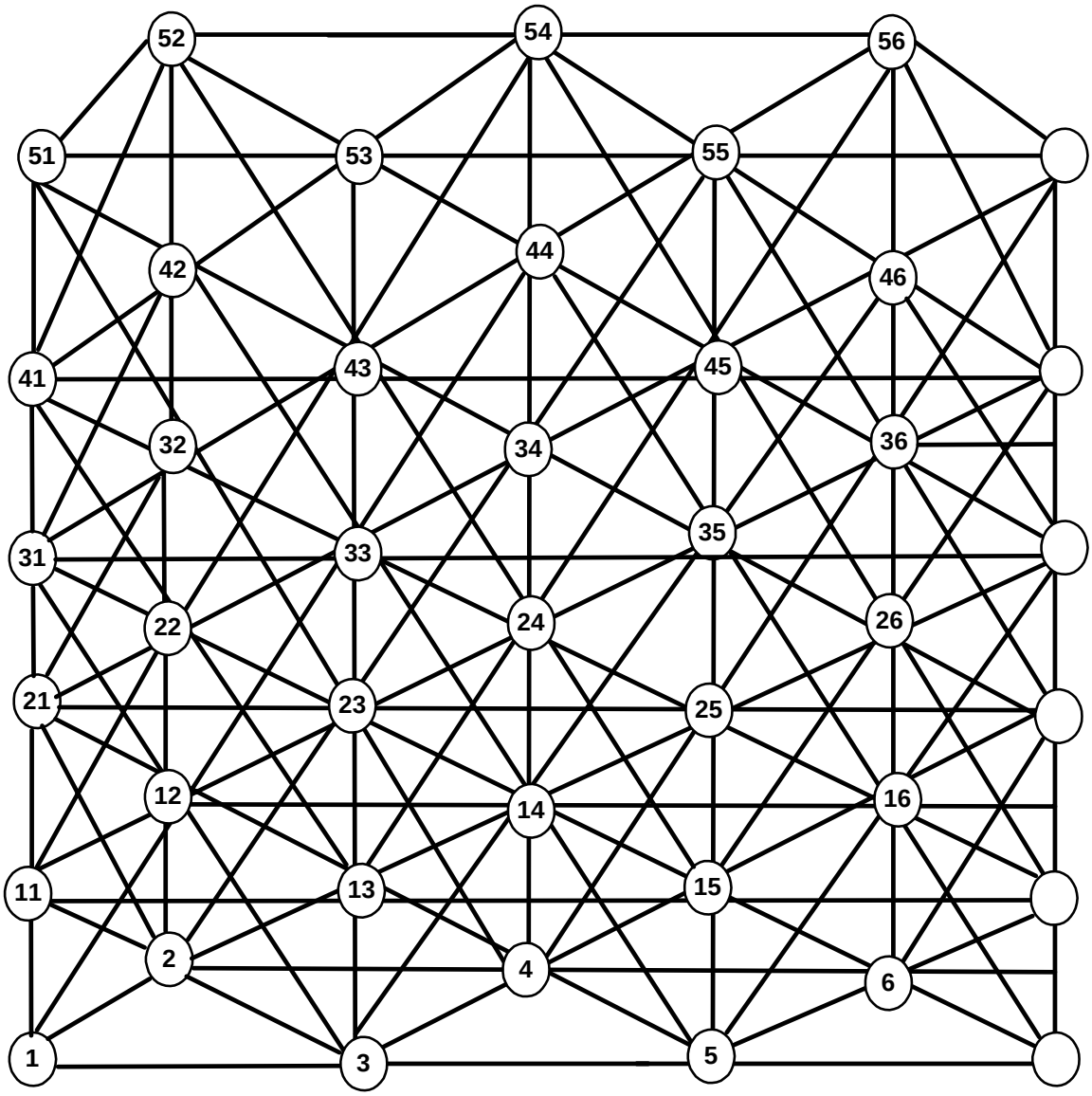

Figure 4-2. Basic Polygrid Pattern

c. Alternate Routing**.** The network is sufficiently balanced to enable any section of it to take on alternately routed traffic loads occasioned either by an unusual concentration of activity in suddenly created communications focal points or by sudden loss of facilities or switching centers. The alternate routing capabilities of the network enable automatic skirting of interrupted or overloaded interswitch trunk groups.

4.5.2.1.2 Routing Procedures.

a. Progressive Routing. The general approach to alternate routing through the DSN Backbone is one of progressive routing. From a given originating switch to a given destination switch, all programmed route choices are examined, in turn, for the best routing to the destination, the next best, and so on until an available link is selected for transmission of the call. The selected switch then becomes the originating switch, and then the selection process begins again. Thus a switch loses control of the routing after it passes call control to the next switch. This is the basic structure for Method 1 and Method 2 trunk route selection for calls above ROUTINE as described in Paragraph 3.2.3.1 and its subparagraphs. When the route control digit is employed for routing the rules for selecting available alternate routes change as described below and in the following subparagraphs.

b. Exterior and Interior Routing. There are two distinct forms of routing using the route control digit, which are based on the relationships of the originating switch and the theater/home grid configuration of the destination. If the originating switch is not in the theater/home grid of the destination switch, it is called “exterior” routing. If it is in the theater/home grid of the destination switch, it is called “interior” routing.

(1) If the originating switch is exterior to the destination theater/home grid, the routing plan consists of a maximum of ten possible route choices: a direct route and three alternate route triples. Alternate triples are defined as groups of up to three routes each arranged in order of preferability. The alternate triples are defined in order as the first triple (1st T), second triple (2nd T), and third triple (3rd T). In some cases, these triples may be reduced to partial triples of one or two routes due to the paucity of acceptable route choices.

(2) If the originating switch is in the theater/home grid of the destination switch, a maximum of seven possible route choices exists: a direct route followed by two triples. The two triples are designated the (1st T) and (2nd T).

4.5.2.1.3 Route Control Principles.

It is necessary to make a distinction between forward and lateral routing in establishing the principles of route control. Forward routing is defined as advancing a call to a switching center that is geographically nearer to the destination. Furthermore, there must be no traffic programmed for that destination in the reverse direction over the trunk group in question.

Lateral routing is defined as routing a call to a switching center so as not to advance the call geographically as in forward routing. There may be traffic for the same destination programmed in the reverse direction of the trunk group in question. Lateral routing has to be distinguished from forward routing for the same destination to prevent "shuttle" (call routing back and forth between switching centers) and no "ring-around-the-rosie" (call returning to a switching center via another switching center.

It is necessary, also, to establish a rule that a call arriving at a theater/home grid does not leave the theater/home grid in further routing. From this rule it can be seen that a call which enters a theater/home grid from a switching center exterior to the theater/home grid has employed forward routing and will not be programmed with reverse traffic.

4.5.2.1.4 Route Control Digit.

Route Control in the DSN Backbone network depends on the use of the route control digit (RCD). The RCD is an integer, within the assigned numbering plan, which immediately precedes the address digits transmitted using CAS and/or DSN7 CCS signaling over interswitch trunks (CAS = P X Y KXX KXX XXXX; DSN7 CCS = X Y KXX KXX XXXX). The RCD has the following functions:

a. To exercise control over alternate routing at the switching center.

b. To prevent "call shuttling" and "ring-around-the-rosie."

c. To assist in limiting the number of interswitch trunk links that may be used on a call.

4.5.2.1.5 Route Control Digit Rules.

a. Route control digit "0" is always used on local originating when the backbone is entered over trunks that support the route control digit.

b. Route control digit "0" is always used on forward routes (no reverse traffic programmed for the code group).

c. Route control digit "1", "2", or "3" must be used on lateral routes (reverse traffic may be programmed on these routes.)

d. Route control digit "1" "2 or "3" is used on the first lateral route; route control digit "3" is used on the second or only lateral route.

e. The direct route is always a forward route.

f. The first alternate can be a forward or lateral route.

g. The route control digit logic is shown in table 4-11.

Table 4-11. Route Control digit Logic

RCD Received	RCD Transmitted If Selected Route Is	
	Forward	Lateral
0	0	1,2,or 3
1	0	3
2	0	3
3	0	3 (Normally NA)

h. The search algorithm is limited to the direct and first alternate for ROUTINE calls and for the friendly search for priority and higher calls.

i. In the preemptive search the trunks are tested one by one to determine if there are any idle trunks in the direct route. If so, an idle trunk in the direct route is selected; if not, the call of the lowest precedence is preempted, provided the precedence of the call selected for preemption is lower than the precedence of the call being processed. Failing to complete the call on the direct route, the preemptive search advances to the first triple and repeats the process previously described. If the call is still not completed, the process is repeated for each successive programmed triple. Complete failure shall result in a Blocked Precedence Announcement (BPA).

j. All precedence calls to selected destination centers shall be processed in one of two ways as described below:

   (1) A precedence call failing to find an idle trunk in the direct route shall search in the first triple before entering a preemptive search.

   (2) A precedence call failing to find an idle trunk in the direct route shall immediately enter the preemptive search and continue as described previously. This alternative shall be used at switching centers with dedicated 4-wire subscribers and at switching centers serving as gateways to the overseas (OCONUS) areas.

k. The outgoing route control digit will be the same for all precedence levels (ROUTINE through FLASH OVERRIDE) given the same route selected and the same route control digit received.

4.5.2.1.6 Exterior Routing Rules

The route control digit logic for exterior routing is shown in table 4-12. The rules listed above are applied to routing in routes exterior to the Theater/Home Grid as shown in Tables 4-13, 4-14, and 4-15 below.(Note: In the tables below the 1st alternate triple is shown as a lateral route. If the 1st alternate triple is a forward route the rules required for outpulsing RCDs on the direct route will apply)

Table 4-12. Route Control Digit Logic for Exterior Routing

ROUTINE CALLS (P4)	
RCD	Route Selected
0	Use Direct plus 1st Triple
1	Use Direct plus 1st Triple
2	Use Direct plus 1st Triple
3	Use Direct plus 1st Triple
NON ROUTINE CALLS (P0-P3)	
0	All Programmed Routes
1	Use direct route plus 1st and 2nd Triples
2	Use direct route plus 1st and 3rd Triples
3	Use direct route plus 1st Triple

Table 4-13. ROUTINE CALLS

RCD In	"Direct" Out RCD	1st Alternate Out RCD	2nd Alternate Out RCD	3rd Alternate Out RCD
0	0	1,2 or 3	NA	NA
1	0	3	NA	NA
2	0	3	NA	NA
3	0	3	NA	NA

Table 4-14. Precedence Calls Above ROUTINE – Idle Search Sequence

RCD In	"Direct" Out RCD	1st Alternate Out RCD	2nd Alternate Out RCD	3rd Alternate Out RCD
0	0	1,2,or 3	NA	NA
1	0	3	NA	NA
2	0	3	NA	NA
3	0	3	NA	NA

Table 4-15. Precedence Calls Above ROUTINE – Preemptive Search Sequence

RCD In	"Direct" Out RCD	1st Alternate Out RCD	2nd Alternate Out RCD	3rd Alternate Out RCD
0	0	1,2,or 3	3	3
1	0	3	3	NA

2	0	3	NA	3
3	0	3	NA	NA

NOTE: "NA" = Not Allowed.

4.5.2.1.7 Interior Routing Rules

The route control digit logic for interior theater/home grid routing is shown in table 4-16. This logic is depicted in Tables 4-17, 4-18, and 4-19 below. (Note: In the tables below the 1st alternate is shown as a lateral route not a forward route. If the 1st alternate is a forward route the outputted RCDs required in the direct route will also apply to the 1st alternate.)

Table 4-16. Route Control Digit Logic for Interior Theater/Home Grid Routing

ROUTINE CALLS (P4)	
RCD	Route Selected
0	Use Direct plus 1st Triple
1	Use Direct only
2	Use Direct only
3	Use Direct only
NON ROUTINE CALLS (P0-P3)	
0	All Programmed Routes
1	Use direct route plus 1st Triple
2	Use direct route plus 2nd Triple
3	Use direct route only

Table 4-17. ROUTINE CALLS

RCD In	"Direct" Out RCD	1st Alternate Out RCD	2nd Alternate Out RCD	3rd Alternate Out RCD
0	0	1,2,or 3	NA	NA
1	0	NA	NA	NA
2	0	NA	NA	NA
3	0	NA	NA	NA

Table 4-18. Precedence Calls Above ROUTINE – Idle Search Sequence

RCD In	"Direct" Out RCD	1st Alternate Out RCD	2nd Alternate Out RCD	3rd Alternate Out RCD
0	0	1,2,or 3	NA	NA
1	0	NA	NA	NA
2	0	NA	NA	NA
3	0	NA	NA	NA

Table 4-19. Precedence Calls Above ROUTINE – Preemptive Search Sequence

RCD In	"Direct" Out RCD	1st Alternate Out RCD	2nd Alternate Out RCD	3rd Alternate Out RCD
0	0	1,2 or 3	3	3
1	0	3	NA	NA
2	0	NA	3	NA
3	0	3	NA	NA

NOTE: "NA" = Not Allowed.

4.5.2.1.8 Subscribers on a Multifunction Switch

Line originations on a multifunction switch (MFS) are not considered to be on the backbone network until they leave the MFS. As a result, route control digit limitations will not be applied to the calls until they leave the MFS. The following are the rules for this case:

a. When terminating to a trunk that uses the route control digit a "0" will be sent out in all cases.

b. All routes shall be searched for all precedence levels (ROUTINE through FLASH OVERRIDE).

4.5.2.1.9 Dual-Theater/Homed End Offices with Single Addresses

a. Rule for Dual Homing of End Offices. The pair of switching centers serving a dual-theater/homed end office with a single address will be directly interconnected by a trunk group. This rule is necessary for transmission purposes to limit the number of additional links required on a call and to simplify the route control program.

b. Classification of Centers Relative to a Dual-Theater/homed End Office Figure 4-3 illustrates a dual-homing arrangement for an end office with a single address. The two centers serving this end office are designated as D1 and D2. D1 and D2 are interconnected according to the rule stated above. Each of these destination centers has a theater/home grid determined by the basic network geometry and theater/home grid principles discussed earlier. Centers in the theater/home grid for D1 are designated as G1; those in the theater/home grid of D2 are designated as G2; while those that are in both theater/home grids are designated as G12. All other centers are programmed to use the routing program for one of the two destination centers, either D1 or D2. The bias of the dual-theater/homed routings of exterior centers toward one of the two destination centers results in efficient use of routing programs.

c. Routing Principles for Dual-Theater/homed PABX/PBX's

(1) Forward routing toward a dual-theater/homed end office is always used to reach any of the theater/home grid centers G1, G2, or G12. Routing from any of these three classifications of theater/home grid centers to the D1 or D2 destination center is

defined as forward routing. In both instances of forward routing route control digit "0" is sent ahead. Routing from G1 or G2 centers is conventional theater/home grid lateral routing which follows the principles discussed previously.

(2) The G12 centers employ a special theater/home grid routing pattern. The route control digit logic in G12 centers is shown in table 4-20. This logic is depicted in Tables 4-21, 4-22, and 4-23. This pattern restricts lateral routings to other G12 offices, since lateral routings to G1 and G2 centers are regarded as backward routings in the context of dual-theater/homed end office programming. The reason for this is that a call reaching a G12 center has direct trunking to both serving centers D1 and D2. In contrast to this, the G1 and G2 centers have direct trunking to only one of the two serving centers.

(3) Other backward routings not permitted are routings from G1, G2, and G12 centers to exterior centers and routings from D1 and D2 centers to exterior centers and routings from D1 and D2 centers to G1, G2, and G12 centers. The recommended arrangement is to employ normal theater/home grid programming in centers G1 and G2 with calls to the dual-theater/homed locations being handled in these centers as though they were single theater/homed in the respective D1 or D2 destination centers. This method also conserves routing programs.

Table 4-20. Route Control Digit Logic in G12 Centers

ROUTINE CALLS (P4)	
RCD	Route Selected
0	Use direct route only
1	Use direct route only
2	Use direct route only
3	Use direct route only
NON ROUTINE CALLS (P0-P3)	
0	Use direct route plus Alternate
1	Use direct route plus Alternate
2	Use direct route plus Alternate
3	Use direct route only

Table 4-21. ROUTINE CALLS

RCD In	"Direct" Out RCD	Alternate Out RCD
0	0	NA
1	0	NA
2	0	NA
3	0	NA

Table 4-22. Precedence Calls Above ROUTINE– Idle Search Sequence

RCD In	"Direct" Out RCD	1st Alternate Out RCD
0	0	NA
1	0	NA
2	0	NA
3	0	NA

Table 4-23. Precedence Calls Above ROUTINE– Preemptive Search Sequence

RCD In	"Direct" Out RCD	Alternate Out RCD
0	0	0
1	0	0
2	0	0
3	0	NA

NOTE: "NA" = Not Allowed.

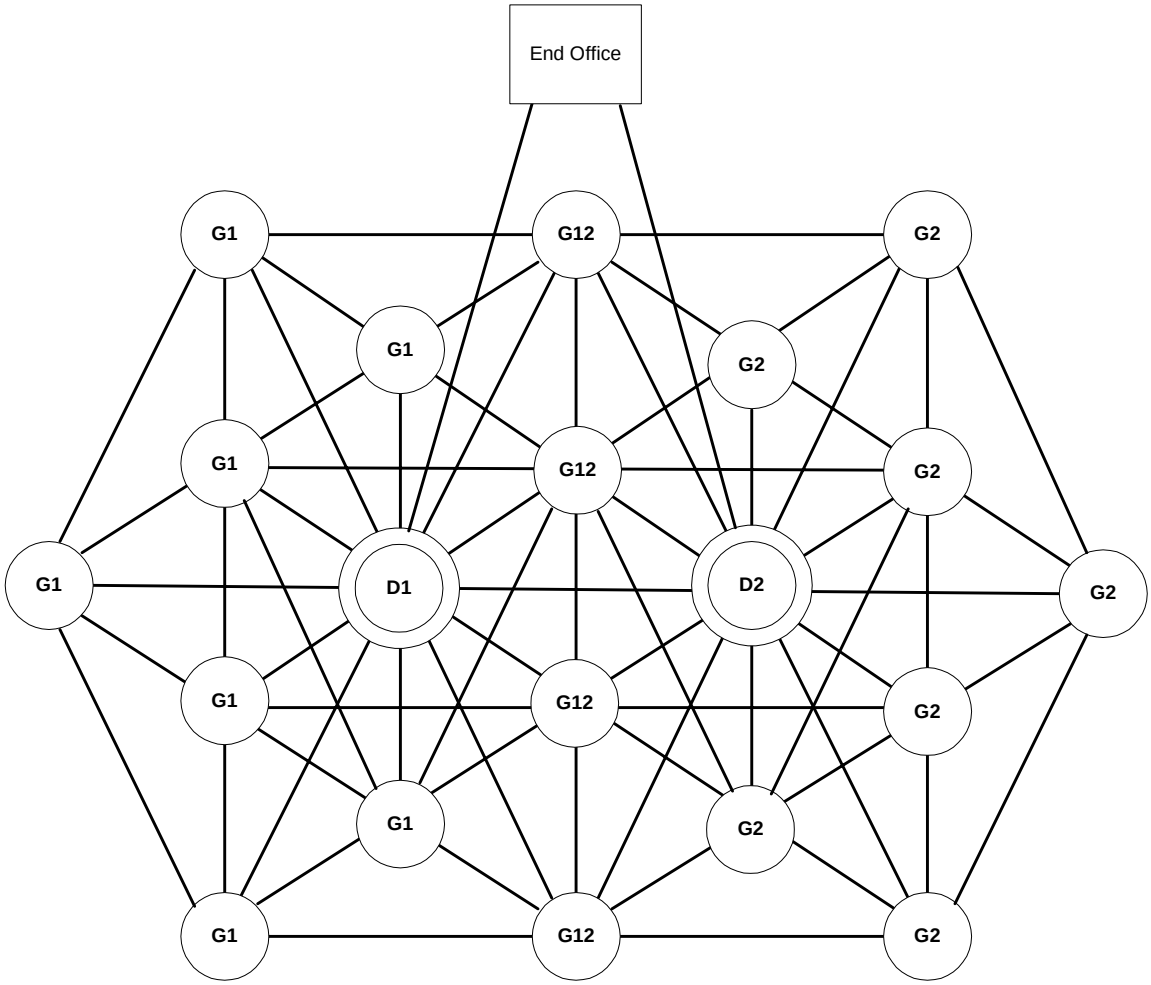

Figure 4-3. Dual-Homed End Office with Single Address Grid Array.

4.5.3 Standard Directory Numbers

[Required: MFS, EOS, SMEO, PBX1] Standard directory numbers for the services listed in Table 4-24 shall adhere to the format and assignments specified and shall allow a network call to reach that service.

Table 4-24. Standard Directory Numbers

Call Type	Number Assignment
Local Attendant Service	0
Attendant Service DSN	KXX-1110
Chief Operator	KXX-1311
Weather Announcer	KXX-1381
Time	KXX-1391
Trouble Reporting	KXX-1611
Note: X is any digit 0-9 K is any digit 2-8	

4.5.4 Standard Test Numbers

[Required: TS, EOS, MFS – Conditional: SMEO, PBX1] Standard test numbers for test and maintenance capabilities shall adhere to the format and number assignments listed in Table 4-25.

Table 4-25. Standard Test Numbers

Call Type	Number Assignment
Milliwatt Test	KXX-1021
Supervisory and Signal Test	KXX-1031
Far End Transmission and Noise Test	KXX-1041
Dial Speed Test	KXX-1351
DTMF Test	KXX-1361
Ringback Test	KXX-1371
Line Check Test	KXX-1301
Loop Around Termination	KXX-1061
Echo Canceler Test Loop around termination with 10db pad inserted between receive and transmit	KXX-1062
Preemption Test	KXX-1071
Digital Loop Back Testing	KXX-1081
Bonding Mode 1 Loop	KXX-1091
Note: X is any digit 0-9 K is any digit 2-8	

4.5.5 Base Services – Abbreviated Numbers

[Required: TS, EOS, SMEO, MFS - Conditional: PBX1] The format 10X is used where conflicts between DSN route codes (1X) and base service number (1XX) exist. When 7-digit

intraswitch dialing is used, the switch shall be programmed in such a manner that after the 11X code is received, and no additional digits are received within approximately 4 seconds or after a # is dialed, the call shall be treated and processed as a base service call. If additional digits are received within the 4-second time period, the call shall be treated and processed as a DSN call.

4.5.6 Digit Reception Requirements

[Required: TS, EOS, SMEO, MFS, PBX1] Switches shall meet the digit reception requirements in Telcordia GR-505-CORE, *Call Processing*, Issue 1, December 1997, paragraph 7.2.

4.5.7 Digit Registration Capacity

[Required: TS, EOS, SMEO, MFS]

Switches shall meet the digit registration requirements in Telcordia GR-505-CORE, *Call Processing*, Issue 1, December 1997, paragraph 7.3.

4.5.8 Screening

[Required: EOS, SMEO, MFS – Conditional: PBX1, PBX2] Before routing a call that is dialed from a user line, the system shall be capable of determining routing functions from class of service information associated with the line. DSN switches shall be capable of performing screening functions as described in Telcordia Technologies GR-505-CORE, *Call Processing*, Issue 1, December 1997, paragraph 8, requirements R8-1 and R8-2. In addition DSN switches shall be capable of performing the following screening functions.

4.5.8.1 Zone Restriction Servicing of Local Originators.

[Required: EOS, SMEO, MFS - Conditional: PBX1, PBX2] Zone restriction shall be employed in the DSN to prevent a particular originator or group of originators from completing calls to specified destinations (codes). A zone can consist of an area code, office code, or any combination of these codes. If any area, specific code, service, or location is to be denied to even one user, the denial must be accomplished by zone restriction in the originating station's switching center. Zone restriction as it applies in any one switching center is independent of the zone restriction assignments in any other switching center. There shall be up to 15 zone restriction tables.

SECTION 5 – Signaling

5.0 Introduction

This section covers the signaling requirements for DSN switching systems. The requirements are based on Telcordia Technologies Generic Requirements GR-506-CORE, Issue 1, Revision 1, November 1996, *LSSGR: Signaling for Analog Interfaces; DSN Generic Switching Center Requirements (GSCR)*, September 1994 & March 1997; American National Standards Institute (ANSI) T1.619, 1992; ANSI T1.619a,1994; ANSI T1.110, 1999; ANSI T1.116, 1996; ANSI T1.116a, 1998; ANSI T1.111, 1996; ANSI T1.114, 2000; ANSI T1.112, 1996, and ANSI 1.113, 1995;

Requirements for analog signaling also apply to digital circuits using channel associated signaling (CAS).

5.1 Network Power Systems for External Interfaces

[Required: TS, EOS, SMEO, MFS] DSN switching systems shall meet the network power systems requirements specified in the Telcordia Technologies GR-506-CORE, paragraph 2.1.

5.2 Line Signaling

5.2.1 Loop Start Line.

[Required: EOS, MFS, SMEO, PBX1 - Conditional: PBX2] In a loop start line arrangement, the switch supplies battery between the ring and the tip conductors. The switch detects a loop closure from the customer station as a seizure, after which it provides dial tone on the tip and ring conductors as a start dial signal.

DSN switching systems shall meet this requirement in accordance with the "R" requirements in Telcordia Technologies GR-506-CORE, *Signaling For Analog Interfaces*, Issue 1, Revision 1, Nov 1996, paragraphs 3 through 3.4.7, 6.2.1, 6.3.1, 13.6.1.1, 13.6.2.1, 13.6.3.1, and 13.7.1.

5.2.2 Ground Start Line.

[Required: EOS, MFS, SMEO, PBX1 - Conditional: PBX2] In a ground start line arrangement, the switch provides battery through a ground detector to the ring conductor and leaves the tip conductor open. The customer station or PBX seizes the line by applying a ground to the ring conductor. The switch responds by returning ground on the tip conductor and dial tone across the tip and ring as start dial signals. When the tip ground is detected from the switch, the customer station or PBX changes to loop closure for the off-hook state. Alerting the customer or PBX is done by connecting 20-Hz ringing to the ring conductor and ground to the tip conductor.

DSN switching systems shall meet this requirement in accordance with the "R" requirements in Telcordia Technologies GR-506-CORE, *Signaling For Analog Interfaces*, Issue 1, Revision 1, Nov 1996, paragraphs 4 through 4.4.8, 13.2.2, 13.6.1.1, 13.6.2.2, 13.6.3.2, and 13.7.2.

5.3 Trunk Supervisory Signaling

5.3.1 Reverse Battery (RB)

[Required: EOS, MFS, SMEO, PBX1 - Conditional: PBX2] The trunk circuit at one end of a variety of loop signaling trunks applies battery and ground through suitable resistances to the tip and ring conductors. One polarity on the tip and ring leads is used of the on-hook state, and the reverse is used for the off-hook state.

DSN switching systems shall meet this requirement in accordance with the "R" requirements in Telcordia Technologies GR-506-CORE, *Signaling For Analog Interfaces,* Issue 1, Revision 1, Nov 1996, Paragraphs 7 and 8.

5.3.2 Immediate Start

[Required: TS, EOS, MFS - Conditional: SMEO, PBX1, PBX2] Immediate start (by-link) is a feature that provides intersystem address signaling between the switch and a system that transmits and/or receives address signals without special address control signals. For the reception of digits from offices requiring immediate start, the system shall be prepared to recognize the first dial pulse promptly after the connect signal is received. For transmission of address information to an office requiring immediate start, the system shall delay outpulsing after sending the connect signal to ensure that the distant office is ready. It is desirable that the transmitting office verifies that battery and ground are of the proper polarity at the time of seizure. Failure to detect the proper condition shall result in a retry of the call and a failure recorded.

DSN switching systems shall meet this requirement in accordance with the "R" requirements in Telcordia Technologies GR-506-CORE, *Signaling For Analog Interfaces,* Issue 1, Revision 1, Nov 1996, paragraph 11.2.2.

5.3.3 Normal and Abnormal Wink Start Operation

5.3.3.1 Normal Wink Start Operation

[Required: TS, EOS, MFS, SMEO – Conditional: PBX1, PBX2] Wink start is a feature that provides control for address signaling between systems arranged with wink start as a special address control signal. The wink start signal is applicable to specified incoming, outgoing, and two-way trunks and is used to inform the calling office that the called office is prepared to receive address signals. For wink start operation, the transmitting office shall test for the detection of the brief off-hook as a signaling integrity check. DSN switching systems shall provide wink start operation in accordance with the requirements in Telcordia Technologies GR-506-CORE, "*Signaling For Analog Interfaces*", Issue 1, Revision 1, June 1996, Paragraph 11.2.1.

5.3.3.2 Glare Operation

[Required: TS, EOS, MFS, SMEO – Conditional: PBX1, PBX2] Glare occurs when both interfaces of switching systems connected to the same inter-switching-system facility (trunk) apply a seizure signal at approximately the same time. DSN switching systems shall provide glare

detection and resolution in accordance with the requirements in Telecordia Technologies GR-506-CORE, "*Signaling For Analog Interfaces*", Issue 1, Revision 1, June 1996, Paragraph 11.5.

5.3.3.3 Abnormal Operation

5.3.3.3.1 Wink Start

[Required: TS, EOS, MFS, SMEO – Conditional: PBX1, PBX2] After the connect signal is sent over the trunk, the originating office can normally expect to receive a wink start (timed off-hook) signal indicating that the terminating office is ready to receive address signaling. When the end of the wink start signal is received, the originating office may begin outpulsing. The duration of the off-hook wink returned by the terminating office will be 140 to 290 ms. However, because of distortion in the trunk facilities, the duration of the wink received by the originating office may vary (refer to figure 3-2). If the wink is shorter than the minimum allowable interval, it shall be ignored. If it is greater than the maximum interval, the call shall be considered to be in a glare condition as described in paragraph 5.3.3.3.2.

5.3.3.3.2 Glare Resolution

[**Required: TS, EOS, MFS, SMEO - Conditional: PBX1, PBX2**] DSN switches shall meet the glare resolutions requirements defined in Telcordia Technologies GR-506-CORE, *Signaling For Analog Interfaces,* Issue 1, Revision 1, Nov 1996, paragraph 11.5 and subparagraphs.

5.3.4 Delay Dial

[Conditional: EOS, MFS, SMEO, PBX1, PBX2] If this feature is provided, it shall be in accordance with Telcordia Technologies GR-506-CORE, *Signaling For Analog Interfaces*, Issue 1, Revision 1, Nov 1996.

5.3.5 Call for Service Timing

[Required: TS, EOS, MFS, SMEO, PBX1 – Conditional: PBX2] The switching system shall ignore as a "hit" any transient off-hook signal whose duration is less than 35 milliseconds (MS) on an incoming trunk. Off-hook signals greater than 60 milliseconds shall be considered as a valid seizure. Signals that are 15 to 60 milliseconds in length are considered invalid seizures.

5.3.6 Guard Timing

[Required: TS, EOS, MFS, SMEO, PBX1 – Conditional: PBX2] DSN switching systems shall meet guard requirements in accordance with Telcordia Technologies GR-506-CORE, *Signaling For Analog Interfaces,* Issue 1, Revision 1, Nov 1996.

5.3.7 Satellite Interface

[Required: TS, EOS, MFS, SMEO – Conditional: PBX1, PBX2] The DSN switching system shall accommodate the use of single satellite-derived trunk facilities. The only interface parameter

that must be modified is the guard timing. This interval shall be extended from 1050 to 1250 milliseconds to compensate for propagation delay.

5.3.8 Disconnect Control

[Required: TS, EOS, SMEO, MFS – Conditional: PBX1, PBX2] DSN switching systems shall meet the Disconnect Control requirements in Telcordia Technologies GR-506-CORE, *Signaling For Analog Interfaces*, Issue 1, Revision 1, Nov 1996, paragraph 13 and all subparagraphs.

5.3.9 Reselect or Retrial

[Required: TS, EOS, MFS, SMEO – Conditional: PBX1, PBX2] The actions that shall be taken by the switch are summarized below based on the direction of the circuit (outgoing or two-way), the method of controlled outpulsing (wink start or delay dial), and the method of glare resolution on two-way circuit (hold or release). The switch shall reselect or retry on circuit supervision faults as follows:

Table 5-1. Reselect or Retrial

Fault	Recommended Operation
1. Glare detected to glare release	Release once in same trunk group. If glare again detected or the group is all trunk busy (ATB), route advance.
2. Sender timeout on glare hold	Reselect once in the circuit same trunk group. If no circuits are idle or preemptable, route advance. If a circuit is idle or preemptable and the failure occurs on the retrial, route advance.
3. Sender timeout occurs, on an outgoing delay dial circuit.	Same as "2."
4. Integrity check failure on a delay dial circuit.	Reselect once in the same group. If fault is detected or if route is ATB, route advance.
5. No wink received on a wink start circuit	Same as "2."
6. Wink exceeds 350 ms on an outgoing wink start circuit.	Same as "2."
7. Unexpected stop on an MF circuit.	Same as "2."

5.3.10 Off-Hook Supervision Transitions (Unexpected Stop)

[Required: EOS, MFS, SMEO – Conditional: PBX1, PBX2] DSN switches shall detect and react to unexpected off-hook supervisory transitions while outpulsing on trunks, after receipt of the start-dial indication and until completion of the outpulsing. An unexpected stop is defined as an

off-hook supervision transition whose duration exceeds the "hit" timing interval. When an unexpected stop is detected, the system shall reselect another trunk.

5.4 Control Signaling

Control signaling is used for the reception and outpulsing of address, precedence, and routing information. There are 3 types of outpulsing: Dial-Pulse, Dual Tone Multifrequency (DTMF), and multifrequency 2/6. The switch shall support as applicable the following signaling combinations: DTMF 2way, DP 2way, DTMF in-DP out, DP in-DTMF out, MFR1 2/6 2way. Audible tones shall be in accordance with Telcordia Technologies GR-506-CORE, Signaling for Analog Interfaces, Issue 1, June 1996, Paragraph 17.

5.4.1 Dial-Pulse (DP) Signals

[Required: TS, EOS, SMEO, MFS - Conditional: PBX1, PBX2] DSN DP signaling requirements are the same as those specified in Telcordia Technologies *Signaling for Analog Interfaces,* GR-506-CORE, Issue 1 June 1996, paragraph 10.

5.4.2 Dual Tone Multi-Frequency (DTMF) Signaling

[Required: TS, EOS, SMEO, MFS – Conditional: PBX1, PBX2]

The DSN switching system shall be capable of outpulsing and interpretation of DTMF digits on outgoing or two-way trunks as specified in Telcordia Technologies *Signaling for Analog Interfaces,* GR-506-CORE, Issue 1 June 1996, paragraph 15 and table 5-2, below.

Table 5-2. DTMF Generation and Reception from Users and Trunks

		High Group Frequencies Nominal Frequency in Hz			
		1209 Hz	1336 Hz	1477 Hz	1633 Hz
Low Group Frequencies Nominal Frequency in Hz	697 Hz	1	2	3	FO (A)
	770 Hz	4	5	6	F (B)
	852 Hz	7	8	9	I (C)
	941 Hz	*	0	A or #	P (D)

5.4.2.1 Standard Digit Format for Precedence

[Required: TS, EOS, MFS - Conditional: SMEO, PBX1] In addition, the DSN switching system shall be capable of outpulsing and interpretation of DTMF precedence digits in digit 0 through 4 format. (i.e. 0=FLASH OVERRIDE, 1=FLASH, 2=IMMEDIATE, 3=PRIORITY, and 4=ROUTINE)

5.4.3 Multi-Frequency (MF R1 2/6) Signaling

[Required: TS, EOS, MFS – Conditional: SMEO, PBX1] The DSN switching system shall be capable of outpulsing and reception of MF(R1) 2/6 signaling requirements in accordance with

Telcordia Technologies *Signaling for Analog Interfaces*, GR-506-CORE, Issue 1, June 1996, paragraph 16 and its subparagraphs and Table 5.3 shown below.

Table 5-3. MF(R1)2/6 Generation and Reception for Trunks

Digits and Control Codes	Nominal Frequencies (Hz)	Precedence Digits
0	1300 + 1500	(FO) FLASH OVERRIDE
1	700 + 900	(F) FLASH
2	700 + 1100	(I) IMMEDIATE
3	900 + 1100	(P) PRIORITY
4	700 + 1300	(R) ROUTINE
5	900 + 1300	
6	1100 + 1300	
7	700 + 1500	
8	900 + 1500	
9	1100 + 1500	
KP	1100 + 1700	
S/T	1500 + 1700	

5.5 Alerting Signals and Tones

Alerting signals are applied to an access line by the switch interface to inform the end-user of an incoming call.

5.5.1 Ringing

[Required: EOS, SMEO, MFS, PBX1] DSN switching systems shall apply ringing tones and cadences as shown in Table 5-4.

Table 5-4. DSN Ringing Tone and Cadence

Signal	Frequency (Hz)	Single Level Tone	Composite Level	Interrupt Rate	Tone On	Tone Off
Alerting (Ringing) Normal or Routine Call						

4- Wire and 2-Wire	20	86V RMS		10 IPM	2000 ms	4000 ms
Alerting (Ringing) Precedence Call						
4- Wire and 2-Wire	20	86V RMS		30 IPM	1640 ms	360 ms

5.5.2 DSN Information Signals

[Required: EOS, SMEO, MFS, PBX1] DNS switches shall implement the tone signals and cadences shown in Table 5-5.

Table 5-5. DSN Information Signals

Signal	Frequencies (Hz)	Single Tone Level	Composite Level	Interrupt Rate	Tone On	Tone Off
Audible Ringback Precedence Call	440 + 480 (Mixed)	-19 dBm0	-16 dBm0	30 Impulses Per Minute (IPM)	1640 ms	360 ms
Preemption Tone	440 + 620 (Mixed)	-19 dBm0	-16 dBmo		Steady on	
Call Waiting (Precedence Call)	440	-13 dBm0		Continuous at 6 IPM	100 ± 20 ms Three Bursts	9700 ms
Conference Disconnect Tone	852 and 1336 (Alternated at 100 ms Intervals)	-24 dBm0		Steady on	2000 ms (per occurance)	
Override Tone	440			Continuous at 6 IPM	2000 ms (followed by) 500 ms on and 7500 ms off	
Camp On	440	-13 dBm0			Single burst 0.75 to 1 second	

5.6 Common Channel Signaling Number 7 (CCS7)

The Common Channel Signaling Number 7 (CCS7) system shall perform interswitch signaling functions for the DSN. The following specifications represent the set of features standardized for CCS7 in the DSN.

[Required: MFS, TS, EOS - Conditional: SMEO] CCS7 shall be in accordance with the Signaling System 7 (SS7) requirements specified in the most current ANSI T1.100 series of standards and shall be capable of internetworking with ITU-T signaling system no. 7 networks. Exceptions to these standards are explicitly noted in this section. Only those CCS7 requirements that differ from their corresponding ANSI common channel signaling standard section are included.

5.6.1 CCS7 Network Structure

[Required: MFS, TS, EOS - Conditional: SMEO] The CCS7 network shall serve as a separate call control and management network that is overlaid on the DSN. The CCS7 network structure is a one-level hierarchy composed of multiple mated pairs of Signal Transfer Points (STP) and their associated Service Switching Points (SSP) and signaling links in accordance with ANSI T1.110. DSN End Office, Multi-Function, and Tandem switching systems shall be CCS7 Signaling Points (SP). The CCS7 network structure is shown in Figure 5-1. The CCS7 network consists of mated STP pairs connected by "C-Links", these mated pairs may be grouped into "quads" with "B-Links". Signal Transfer Points shall be implemented external to the switches.

Figure 5-1. CCS7 Backbone Network Architecture

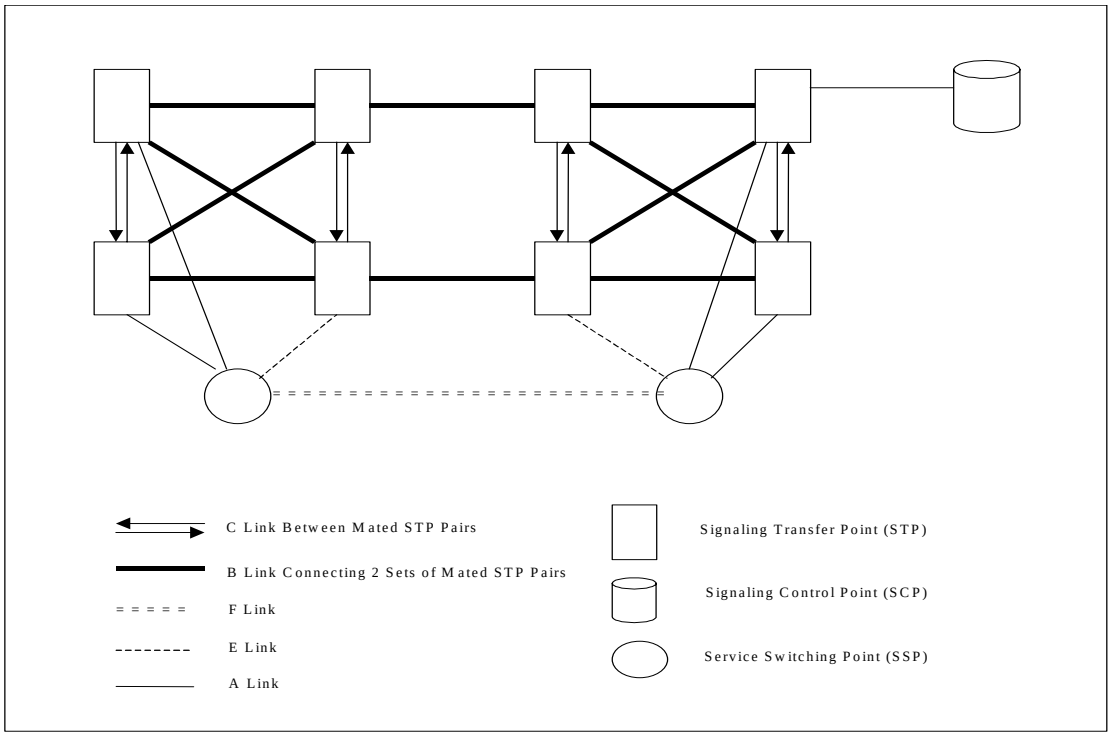

5.6.2 Functional Description of the Signaling System Message Transfer Part (MTP)

[Required: MFS, TS, EOS - Conditional: SMEO] The CCS7 MTP shall be as specified in ANSI T1.111-1996, chapters 1-8. Specific requirements for DSN applications are given in the following subsections:

5.6.2.1 Signaling System Structure – Functional Levels

The fundamental principle of the signaling system structure is the division of functions into separate modules or entities.

5.6.2.1.1 Signaling Data Link Functions (Level 1)

[Required: MFS, TS, EOS - Conditional: SMEO] The signaling data link is a bi-directional digital transmission path comprised of digital signaling links. A maximum of 72 digital signaling links shall be supported at an individual DSN signaling point (SP). Because of its worldwide scope, the CCS7 shall support both terrestrial and satellite transmission for the signaling data links at bit rates of 56 or 64 kbps.

5.6.2.1.2 Signaling Link Functions (Level 2)

[Required: MFS, TS, EOS - Conditional: SMEO] The CCS7 signaling link functions apply to both terrestrial and satellite transmission. These shall require the implementation of both types of error correction methods specified in SS7 (the basic error correction method for use on terrestrial signaling data links and the preventive cyclic retransmission method for use on satellite signaling data links).

5.6.3 Signaling Network Functions and Messages

5.6.3.1 Routing Label

[Required: TS, MFS, EOS - Conditional: SMEO]

The CCS7 uses the U.S. national routing label structure (specified in ANSI T1.111.4) for signaling messages between CCS7 SPs. The routing label shall also be used for routing signaling messages to other U.S. networks that comply with the ANSI SS7 standard. The CCS7 routing label shall comply with the routing label structure for the U.S. networks as shown in Figures 3A and 3B of the T1.111.4. Signaling point codes in the CCS7 are assigned by the Network Administrator in accordance with ANSI guidelines.

5.6.3.2 Handling Messages Under Signaling Link Congestion

[Required: MFS, TS, EOS - Conditional: SMEO] Criteria for the determination of CCS7 signaling congestion status shall be as specified by ANSI T1.111.4, section 3.8 for U.S. networks. Initial Address Messages (IAM) carrying FLASH or FLASH OVERRIDE calls shall be assigned Level 3, IMMEDIATE calls shall be assigned level 2, PRIORITY calls shall be assigned level 1, and ROUTINE calls shall be assigned level 0 in the CCS7.

5.6.3.3 Message Discrimination and Distribution Functions

[Required: MFS, TS, EOS - Conditional: SMEO] The message discrimination function examines the Destination Point Code (DPC) of a received signaling message to determine whether or not it is destined to the receiving SP. Message distribution determines to which user of the MTP

a received signaling message will be directed. This function is also required in all CCS7 signaling nodes.

5.6.3.4 Signaling Network Management

[Required: MFS, TS, EOS - Conditional: SMEO] DSN switching systems shall meet the Signaling Network Management requirements in the Telcordia Technologies GR-606-CORE, *Common Channel Signaling Section 6.5*, December 2000, paragraph 4.

5.6.3.5 Changeback

[Required: EOS, MFS, TS - Conditional: SMEO] The objective of the changeback procedure is to ensure that signaling is diverted from the alternative signaling link(s)to the signaling link made available as quickly as possible, while avoiding message loss or duplication. DSN switching systems shall not use sequence control procedures to perform changeback. The last sentence of the third requirement in the *Telcordia Technologies* GR-606-CORE, December 2000, paragraph 4.3 is changed to read as follows:

The switch shall use the time-controlled diversion procedure.

5.6.4 Noncircuit - Related Information Exchange - Signaling Connection Control Part (SCCP)

[Required: MFS, TS, EOS - Conditional: SMEO] DSN switching systems shall meet the SCCP requirements in the Telcordia Technologies GR-606-CORE, December 2000, paragraph 5 and its subparagraphs.

5.6.5 Additional Procedures for Switch-to-Switch/SCP TCAP Messages

[Required: MFS, TS, EOS - Conditional: SMEO] DSN switching systems equipped for CCS7 shall meet the requirements for switch-to-switch/SCP TCAP messaging requirements in the Telcordia Technologies GR-606-CORE, *Common channel Signaling Section 6.5*, December 2000, paragraph 6 and its subparagraphs.

5.6.6 Message Transfer Part (MTP) Restart

[Required: EOS, MFS, TS - Conditional: SMEO] The Message Transfer Part Restart procedure shall be as specified in ANSI T1.111-1996, paragraph 9 and its subparagraphs.

5.6.7 Signaling Link Management

[Required: EOS, MFS, TS - Conditional: SMEO] There are three signaling link management methods specified in ANSI T1.111.4: Basic signaling link management procedures, signaling link

management procedures based on automatic allocation of signaling terminals, and signaling link management procedures based on automatic allocation of signaling data links and signaling terminals. The automatic allocation of signaling data links and signaling terminals shall be the method implemented in the CCS7.

5.6.8 Signaling Route Management

[Required: EOS, MFS, TS - Conditional: SMEO] CCS7 SP nodes shall be capable of responding appropriately to the receipt of signaling route management messages. For example, a CCS7 SP node may be required to alter its routing information in response to a transfer prohibited, restricted, or allowed message.

5.6.9 Common Characteristics of Message Signal Unit (MSU) Formats

The service information octet of the MSU contains the service indicator and subservice field.

5.6.9.1 Service Indicator

[Required: EOS, MFS, TS - Conditional: SMEO] Requirements for the Service Indicator Codings shall be as specified in ANSI T1.111-1996, paragraph 14.2.1.

5.6.9.2 Subservice Field

[Required: EOS, MFS, TS - Conditional: SMEO] The CCS7 shall use the network code (10) as specified in ANSI T1.111.4. CCS7 messages originating and terminating within the CCS7 or another network conforming to the ANSI standard shall also be coded with the national network code (10). Requirements for the Subservice Field shall be as specified in ANSI T1.111-1996, paragraph 14.2.2.

5.6.10 Formats and Codes of Signaling Network Management Messages

[Required: EOS, MFS, TS - Conditional: SMEO]

The following paragraphs specify CCS7 requirements for the formats and codes of CCS7 signaling network management messages.

a) The signal link code (SLC), used to identify one of 16 possible signaling links between each pair of adjacent (directly connected) signaling nodes, indicates the identity of a signaling link to which a network management message pertains.
b) Each pair of adjacent signaling nodes shall coordinate the assignment of SLCs to ensure compatibility.
c) The SLC may be used in the CCS7 to identify the preferred order of signaling data link selection from among the inter-exchange circuits. Normally, one associated signaling link

between two CCS7 signaling points will be implemented and designated with an SLC at both ends of 0000. The order of selection of backup signaling data links to be obtained from the inter-exchange circuit group may be pre-coordinated and prioritized at both ends. SLC 0001 is assigned to the circuit normally selected first as a backup signaling link. The remaining SLCs are assigned to inter-exchange circuits in the order of their selection as signaling data links. This order of selection shall not be interpreted as prioritizing the signaling links. Any circuit selected to serve as a signaling link remains in service for that purpose until it becomes unavailable (e.g., by failure or management withdrawal, etc.).

d) This pre-assignment can be overridden when communication between both CCS7 signaling points over alternative links is possible. In this case, a signaling data link connection order message may be utilized to indicate which IST will be assigned as a signaling data link and which corresponding SLC will be used.

5.6.11 Numbering of Signaling Point Codes

[Required: EOS, MFS, TS - Conditional: SMEO] The CCS7 numbering of signaling point codes shall be as specified in ANSI T1.111.8. The DSN meets the ANSI requirements for a large network and has been granted a network code value of 241. ANSI T1.111.8, Table B1, shows the current list of assigned large network codes. Signaling point codes in the CCS7 are assigned by the Network Administrator in accordance with ANSI guidelines.

5.6.12 Functional Descriptions of the Integrated Services Digital Network (ISDN) User Part

5.6.12.1 Scope, Purpose, and Application

[Required: MFS, TS - Conditional: EOS, SMEO] The ISDN User Part specifies the signaling functions, codes, messages, and procedures needed to provide services for circuit-switched voice and data services in the CCS7.

5.6.12.2 End-To-End Signaling

[Required: MFS, TS - Conditional: EOS, SMEO] End-to-end signaling transports signaling information between the end points of a circuit-switched connection or between any two points in the signaling network. Pass along message (PAM), ANSI T1.111, and SCCP, ANSI T1.112, end-to-end signaling methods shall be supported in CCS7.

5.6.13 Formats and Codes – Integrated Services Digital Network (ISDN) User Part Parameters

[Required: MFS, TS, EOS - Conditional: SMEO] The IS-UP specifies the signaling functions, codes, and procedures needed to provide services for circuit-switched voice and data services. CCS7 switching services shall meet the requirements in the Telcordia Technologies LSSGR, *Switching System Generic Requirements for Call Control Using the Integrated Services Digital*

Network User Part, GR-317-CORE, November 2000, except as modified in the following subparagraphs.

5.6.13.1 Notification Indicator

[Required: MFS, TS, EOS - Conditional: SMEO] The Following code shall be added to indicate a delay may be experienced in completing the call: 0000100 call completion delay.

5.6.13.2 IS-UP Messages

[**Required: MFS, TS, EOS - Conditional: SMEO]** CCS7 shall use the messages in the Telcordia Technologies, GR-317-CORE, November 2000, Appendix A. In addition, CCS7 shall meet the requirements in ANSI T1.113.2 and T1.619a for messages which are not specified in the Telcordia Technologies generic requirements.

5.6.13.3 IS-UP Parameters

[Required: MFS, TS, EOS - Conditional: SMEO] CCS7 shall use the IS-UP parameters specified in the Telcordia Technologies, GR-317-CORE, November 2000, Appendix B. In addition, CCS7 shall use IS-UP parameters specified in ANSI T1.113.3 for parameters not specified in the Telcordia Technologies requirements.

5.7 ISDN DSS1 Signaling

5.7.1 DSN ISDN User to Network Signaling.

The objective of this DSN ISDN user-to-network signaling specification is to provide digital out-of-band signaling on an ISDN interface. The DSN ISDN user-to-network signaling specification, which captures protocols under the umbrella of Digital Subscriber Signaling System No. 1 (DSS1), is intended to provide a signaling protocol that will allow signaling over an ISDN interface to support:

a. User access to DSN switches equipped with the CCS7.

b. Circuit-switched (CS) calls (both data and voice).

c. Supplementary services that include unique DSN features.

d. Future DSN access signaling requirements for other network services, including public and private network interworking in intra-and inter-country environments, as applicable, and interoperability with other DoD Networks.

5.7.1.1 Application

[Required: MFS, EOS, SMEO, PBX1, PBX2] This section is the DSN switch requirements for user-to-network signaling over an ISDN interface. It specifies the interface signaling protocol for application throughout the DSN and defines the requirements of the DSN user-to-network signaling for exchanging information between customer premises equipment (CPE), including terminal equipment (TE) and PBXs, and DSN network switches. The exchange of signaling information

between CPE and DSN network switches shall be over the D-channel of the ISDN interface. The D-channel may be used either for associated signaling or non-associated signaling as defined in Annex F of American National Standards Institute (ANSI) T1.607. In-band information and tones sent over the B-channel shall be allowed, when applicable. In the DSN host countries, DSN connections may be made with public, private, and military CPE and networks. Protocol and/or signaling gateway conversions shall be required in some instances to provide the desired DSN connections. Such translations shall be handled on a case-by-case basis as detailed in site specific contracts.

5.7.1.2 Physical Layer.

[Required: MFS, EOS, SMEO, PBX1, PBX2] The DSN user-to-network signaling Physical Layer specification for the basic rate interface shall be ANSI T1.605 and ANSI T1.601 or ITU Recommendation I.430 as required for OCONUS applications. The DSN user-to-network signaling physical layer specification for the primary rate interface operating at 1.544 megabits per second (Mbps) shall be ANSI T1.408. The DSN user-to-network signaling specification for the primary rate interface operating at 2.048 Mbps shall be ITU Recommendation I.431.

5.7.1.2.1 S/T Reference Point

[Required: MFS, EOS, SMEO, PBX1, PBX2] For the basic rate interface at the S/T reference point, B-channels shall have the capability of either restricted or unrestricted operation. The restricted capability is necessary for backward compatibility with networks that support the restricted 64 kbps operation. The D-channel shall have unrestricted capability.

5.7.1.3 Data-Link Layer.

[Required: MFS, TS, EOS, SMEO, PBX1, PBX2] The DSN user-to-network signaling data-link layer shall be as specified in the ANSI T1.602, *ISDN -Data-Link Layer Signaling Specification for Application at the User-Network Interface*, which is a pointer document completely aligned with the ITU-T Recommendations Q.920 and Q.921.

5.7.1.3.1 Data-Link Connections

[Required: MFS, TS, EOS, SMEO, PBX1, PBX2] Point-to-point, broadcast, and multipoint data-link connections shall be provided for DSN applications. The ANSI T1.602 depicts examples of point-to-point and broadcast data-link connections. Other point-to-point applications of this specification shall be allowed, such as the support of multiple terminals at the user-to-network interface. A data-link layer management entity shall be provided to support DSN management.

5.7.1.3.2 Peer-to-Peer Procedures of the Data-Link Layer

[Required: MFS, TS, EOS, SMEO, PBX1, PBX2] Within the DSN, peer-to-peer procedures of the data-link layer shall follow the procedures described in the ANSI T1.602, with the additions provided in this paragraph. The Network Administration shall have the responsibility to determine the system parameter values on the DSN user-to-network interface. These parameters shall initially

be set to the default values of the ANSI standard. A means is available in Appendix IV of Q.921 to change the assignment of the system parameters within the range of values specified by the ANSI standard. DSN terminal equipment shall support other values of T200 to allow for multiple terminals on the user side, together with satellite connections in the DSN user-to-network transmission.

5.7.1.4 Layer 3 DSN User-to-Network Signaling

[Required: MFS, TS, EOS, SMEO, PBX1, PBX2] The layer 3 protocols specify the messages and information elements, coding and formats, and procedures employed on the user-to-network interface in order to establish, maintain, and terminate network connections across an ISDN.

5.7.1.4.1 Overview of Layer 3.

The overview of layer 3 of the DSN user-to-network signaling layer 3 shall be as specified in the ANSI T1.615. The ANSI standard is consistent with the seven-layer model described in ITU Recommendation I.320. ANSI T1.615 describes, in general terms, the D-channel layer 3 DSS1 functions and protocol employed across an ISDN user-to-network interface.

5.7.1.4.2 DSN User-to-Network Signaling for Circuit-Switched (CS) Bearer Service

[Required: MFS, TS, EOS, SMEO, PBX1, PBX2] The DSN user-to-network signaling layer 3 specification for CS bearer service (or CS-Basic Call) shall be as specified in the ANSI T1.607 for ISDN primary and basic rate interfaces. ANSI T1.607 is generally aligned with the ITU Recommendation Q.931 (to the extent possible) and covers U.S. unique requirements for CS-Basic Call.

5.7.1.4.3 Sequence of Messages for DSN Circuit-Switched (CS) Calls

[Required: MFS, TS, EOS, SMEO, PBX1, PBX2] Call establishment involves SETUP, SETUP ACK, CALL PROCEEDING, ALERTING, CONNECT, and CONNECT ACK messages. The PROGRESS message shall be used with interworking or with in-band information and patterns to indicate the progress of a call. A three-step call clearing phase shall use the DISCONNECT, RELEASE, and RELEASE COMPLETE messages. The miscellaneous messages - INFORMATION, STATUS ENQUIRY (and STATUS), and NOTIFY - shall be used for the purposes described in ANSI T1.607.

5.7.1.4.4 Message Functional Definitions and Content

[Required: MFS, TS, EOS, SMEO, PBX1, PBX2] The Layer 3 messages used by the DSN user-to-network signaling for CS connections shall be as specified by the ANSI T1.607 except for messages modified in the following paragraphs.

a. SETUP Message. The SETUP message is sent by the calling user to the network or by the network to the called user to initiate call establishment. DSN calls shall use the setup message specified in ANSI T1.607. The Channel Identification, Calling Party Number (when available), and Called Party Number are mandatory information elements (IEs). For an MLPP call (invoking

MLPP feature) on the DSN user-to-network interface, the SETUP message shall include the Precedence Level information element. It shall also contain other IEs such as the Business group (BG) IE for the COI feature when such unique DSN features are required and the Call identity IE (as defined in ITU Recommendation Q.931) for the MLPP feature. The Precedence Level and MLPP service domain (both contained in the Precedence Level IE) and Calling Party Number (contained in the Calling Party Number IE), shall be used to mark the circuit (identified in the Channel Identification IE) to be preempted as "reserved" for reuse by the preempting call when the LFB option is exercised on the DSN user-to-network interface. Table 5-6 shows the SETUP message content for an MLPP call; important differences from the SETUP message in ANSI T1.607 are specified below.

Table 5-6. Setup Message For MLPP Call

Message Type: SETUP			
Significance: Global			
Direction: Both			
Information Element	**ANSI T1.607 Reference**	**Direction**	**Type**
Protocol Discriminator	4.2	both	M
Call Reference	4.3	both	M
Message Type	4.4	both	M
Repeat Indicator	4.5	both	O (Note 1)
Bearer Capability	4.5	both	M (Note 2)
Channel Identification	4.5	both	M (Note 3)
Progress Indicator	4.5	both	O (Note 4)
Network Specific Facilities	4.5	both	O (Note 5)
Display	4.5	n-u	O (Notes 6 & 7)
Keypad Facility	4.5	u-n	O (Note 8)
Signal	4.5	n-u	O (Note 9)
Calling Party Number	4.5	both	M (Note 10)
Calling Party Subaddress	4.5	both	O (Note 11)
Called Party Number	4.5	both	M (Note 12)
Called Party Subaddress	4.5	both	O (Note 13)
Transit Network Selection	4.5	u-n	O (Note 14)
Lower Layer Compatibility	4.5	both	O (Note 15)
High Layer Compatibility	4.5	both	O (Note 16)
User-User	4.5	both	O (Notes 17 & 18)
Locking Shift (Note I)	4.5	u-n	O (Note 19)
Operator System Access	4.6	u-n	O (Note 20)
Precedence Level	(Note II)	both	M
M = mandatory and O = optional elements.			
General Note: Notes 1 through 20 and references of the ANSI T1.607 IE are not repeated for this figure but still apply. (Refer to ANSI T1.607 IE for detailed notes and references.)			
Note I: The Locking Shift IE to identify IEs in U.S. national codeset 5.			
Note II: The Precedence Level IE is in U. S. national codeset 5 and is defined in ANSI T1.619-1992 and T1-619a-1994.			

5.7.1.4.5 General Message Format and Information Elements (IE) Coding

[Required: MFS, TS, EOS, SMEO, PBX1, PBX2] The guidelines specified in the ANSI T1.607 shall be followed in this specification.

a. Application of Codesets within the DSN. The DSN unique IEs, if any, shall employ the following order of preference in using the codesets:

(1) Codeset 0 - highest.

(2) Codeset 5.

(3) Codeset 6 - lowest.

b. Application of Information Elements (IEs) in the DSN. The DSN user-to-network signaling protocol shall maximize the use of codeset "00" (ITU standardized coding) and codeset "10" (national standard) IEs (when codeset "00" is not possible). Following are guidelines for the specific use of such IEs in the DSN.

(1) Called Party Number Information Element (IE). The Called Party Number IE, which identifies one called party of a call, shall accommodate the DSN numbering plan. The variable length number digits parameter in the information element may carry the area code, switch code, and line number from the DSN numbering plan.

(2) Calling Party Number Information Element (IE). The Calling Party Number IE, which identifies the origin of a call, shall accommodate the DSN WDNP as stated for the Called Party Number IE.

(3) Keypad Facility Information Element (IE). The Keypad Facility IE, which conveys ASCII characters entered by means of a terminal keypad (when employed), shall contain the digits entered by a DSN user.

(4) Channel Identification Information Element (IE). The Channel Identification IE identifies a channel within the interface(s) controlled by the signaling procedures. The channel number/slot map parameter within it identifies the B-channel controlled by a particular message. The following two methods of B-channel identification are available for use in the DSN: binary channel number assigned to the channel and a slot map that identifies the time slots used by the channel. The parameter shall be coded exclusively for one method depending upon the number/map parameter information. Both primary rate interfaces, 1.544 Mbps and 2.048 Mbps, shall be supported in accordance with the slot map in ITU-T Q.931.

(5) Transit Network Selection Information Element (IE). The Transit Network Selection IE identifies one requested transit network. It may be repeated in a message to select a sequence of transit networks through which a call must pass. For example, the element may be employed in a SETUP message to specify one or a sequence of transit networks (other than the user-assigned transit network) through which a call must pass. In the case of the DSN user-to-network signaling, this IE shall be used to specify the DSN or a network other than the DSN as a transit network. (DoD networks and foreign PTTs are examples.)

(6) Cause Information Element (IE). The Cause IE shall be in accordance with ANSI T1.619a.

(7) Signal Information Element (IE). The Signal IE, shall be in accordance with ANSI T1.619a. The signal shall be included in the DISCONNECT, PROGRESS, and SETUP messages as appropriate for the MLPP feature.

(8) Notification Indicator Information Element (IE). The Notification Indicator IE, which indicates information pertaining to a call, shall contain the notification description code of "0 0 0 0 1 0 0" (value 4) for the MLPP feature to indicate to the calling user a possible call completion delay when an LFB query is invoked in response to an MLPP call setup.

5.7.1.4.6 Supplementary Services.

[Conditional: MFS, EOS, SMEO, PBX1, PBX2] If provided, Supplementary Services shall be in accordance with the following standards:

- ANSI T1.607-1998, ISDN Layer 3 Signaling Specifications for Circuit Switched Bearer Service for Digital Subscriber Signaling System No.1 (DSS1)
- ANSI T1.613-1992, ISDN Call Waiting Supplementary Service
- ANSI T1.616-1992, ISDN Call Hold Supplementary Service.
- ANSI T1.621-1992, ISDN User-to-User Signaling Supplementary Service
- ANSI T1.632-1993, ISDN Normal Call Transfer Supplementary Service
- ANSI T1.642-1993, ISDN Call Deflection Supplementary Service
- ANSI T1.643-1995, ISDN Explicit Call Transfer Supplementary Service
- ANSI T1.647-1995, ISDN Conference Calling Supplementary Service

SECTION 6 – Transmission

6.0 DSN Transmission Interface

[Required: TS (trunks only), MFS, EOS, SMEO, PBX1, PBX2] The transmission characteristics of switching systems used in, or interfacing to the DSN, shall not degrade the end-to-end transmission performance of the DSN. The transmission characteristics of the switching system shall be based on the switching matrix using Pulse Code Modulation (PCM) digital technology. These interface requirements are mandatory for interfacing with DSN circuits and may also be used for connectivity between DSN switches. These transmission requirements shall be measured in accordance with IEEE Standard 743.

6.1 Input Impedance

[Required: TS (trunks only), MFS, EOS, SMEO, PBX1, PBX2] The input impedance seen looking into each analog line or trunk interface shall meet the requirements in Table 6-1.

Table 6-1. Input Impedance Requirements

PATH THROUGH NEAR END	SWITCH FAR END	REFERENCE IMPEDANCE	FREQUENCY RANGE	MIN RETURN LOSS (at input power level of dBmO)
Line	Digital Interface or 4-Wire Trunk	900 ohms +2.16 microfarad	200-500 Hz 500-340OHz	20dB 26dB
Remote Line (0 dB loss)	Digital Interface or 4-Wire Trunk	900 ohms +2.16 microfarad	200-500 Hz 500-3400Hz	20dB 26dB
Remote Line (≥ 2 dB loss)	Digital Interface or 4-Wire Trunk	900 ohms +2.16 microfarad	200-500 Hz 500-3400Hz	14dB 20dB
2-Wire Trunk	Digital Interface or 4-Wire Trunk	900 ohms +2.16 microfarad	200-500 Hz 500-1000 Hz 1000-3400 Hz	20dB 26dB 30dB
4-Wire Trunk	Digital Interface or 4-Wire Trunk	600 ohms	200-500 Hz 500-1000 Hz 1000-3400 Hz	20dB 26dB 30dB

6.2 Inserted Connection Loss

[Required: TS (trunks only), MFS, EOS, SMEO, PBX1, PBX2] The connection loss inserted by the switching system shall meet the following requirements.

6.2.1 Average Loss At 1004 Hz And Loss Control

[Required: TS (trunks only), MFS, EOS, SMEO, PBX1, PBX2] The minimum insertion loss at 1004 Hz shall be 0.0dB. The maximum average loss measured at 1004 Hz shall be as shown in Table 6-2.

Table 6-2 Average Loss Requirements

Connection Type	Digital System Requirement (dB)
Line or Remote Line to Line Remote Line	1
Line or Remote Line to 2-Wire, 4-Wire	0.75
Line or Remote Line to Digital Interface	0.5
2-Wire or 4-Wire trunks to 2-Wire or 4-Wire trunks	0.75
Digital Interface to 2-Wire or 4-Wire trunks	0.4
Digital Interface to Digital Interface	N/A

6.2.2 Loss Variability At 1004 Hz

[Required: TS (trunks only), MFS, EOS, SMEO, PBX1, PBX2] The maximum loss variability shall be as follows. This shall be met by at least 99 percent of the connections of each connection type shown in Table 6-3.

Table 6-3. Maximum Loss Variability

Connection Type	Loss Variability (dB)
Line to Line, 2-Wire or 4-Wire	± 0.5
4-Wire or 2-Wire to 2-Wire or 4-Wire	± 0.5
Digital Interface to Line, 2-Wire, or 4-Wire	± 0.3
Remote Line to Digital Interface	± 0.5
Digital Interface to Digital Interface	N/A

6.2.3 Attenuation Distortion

[Required: TS (trunks only), MFS, EOS, SMEO, PBX1, PBX2] The attenuation distortion shall be as follows. This shall be met by at least 99 percent of the connections of each connection type as defined by the minimum and maximum losses shown in Table 6-4.

Table 6-4. Attenuation Distortion

Connection Type	Frequency (Hz)	Min. Loss (dB)	Max Loss (dB)
Line, Remote Line,	200	0	5.0
2-Wire to Line, Remote	300	-0.5	1.0
Line, 2-Wire	3000	-0.5	1.0
	3200	-0.5	1.5
	3400	0.0	3.0
Digital Interface to Line,	200	0 (1)	2.0 (1)
Remote Line, 2-Wire and	300	-0.25	0.5
Line, Remote Line, 2Wire-	3000	-0.25	0.5
to Digital Interface (2)	3200	-0.25	0.75
	3400	0	1.5
2-Wire, Line, Remote	200	0	4.0
Line to 4-Wire	300	-0.4	0.65
	3000	-0.4	0.65
	3200	-0.4	1.5
	3400	0	3.0
4-Wire to 4-Wire	200	0	3.0
	300	-0.3	0.3
	3000	-0.3	0.3
	3200	-0.3	1.5
	3400	0	3.0
Digital Interface-to-4-Wire	200	0(1)	2.0 (1)
Trunk and 4-Wire Trunk-to	300	-0,15	0.15
-Digital Interface (2)	3000	-0.15	0.15
	3200	-0.15	0.75
	3400	0	1.5

(1) Value given at 200 Hz is for digital-to-analog direction. For analog-to-digital direction, add 1.0 dB of loss to the value at 200 Hz.

(2) Under the assumption that the signal always passes through the equivalent of the digital interface, these two requirements control attenuation distortion in a digital EOS.

6.2.4 Tracking Error

[Required: TS (trunks only), MFS, EOS, SMEO, PBX1, PBX2] This requirement shall be met by at least 50 percent of the connections of each connection type. The tracking error shall be less than or equal to the values shown in Table 6-5.

Table 6-5. Tracking Error

Connection Type	Input Level (dBmO)	Tracking Error (dB)
Digital Interface to Line, Remote Line,	-37 to +3	± 0.25
2-Wire, or 4-Wire	-50 to -37	± 0.50
All others (except Digital Interface to	-37 to +3	± 0.50
Digital Interface)	-50 to -37	± 1.0

6.3 Frequency Response

[Required: TS (trunks only), MFS, EOS, SMEO, PBX1, PBX2]. Frequency response shall be calculated as loss relative to 1004 Hz as shown in Tables 6-6 and 6-7. Minus (-) indicates less loss and plus (+) indicates greater loss.

Table 6-6. Trunk-to-Trunk Frequency Response

Frequency (HZ)	Loss at 0 dBm0 4-Wire to 4-Wire
60	20 dB min
300-3000	-0.3 to +0.3 dB
3200	-0.3 to 1.5 dB
3400	0 to 3 dB

Table 6-7. Line-To-Line Frequency Response

Frequency (HZ)	Loss at 0 dBm0
60	20 dB min
300-3000	-0.5 to 1 dB
3200	-0.5 to 1 db
3400	0 to 3 dB

6.4 Overload Level

[Required: TS (trunks only), MFS, EOS, SMEO, PBX1, PBX2] The overload level at 900 ohm impedance shall be +3 dBmO.

6.5 Return Loss

[Required: TS (trunks only), MFS, EOS, SMEO, PBX1, PBX2] Return loss for various ports shall be as specified in the following sections.

6.5.1 Two-Wire Line Return Loss

[Required: TS (trunks only), MFS, EOS, SMEO, PBX1, PBX2] Return loss shall be measured from the 2-wire line side at 900 ohms in series with 2.16 microfarads on a line-to-line or line-to-trunk connection. Minimum return losses shall be:

20 dB @ 200-500 Hz
26 dB @ 500-1000 Hz
30 dB @ 1000-3400 Hz

6.5.2 Four-Wire Trunk Return Loss (Impedance)

[Required: TS (trunks only), MFS, EOS, SMEO, PBX1, PBX2] Return loss shall be measured from the 4-wire trunk side at 600 ohms resistive on a trunk-to-trunk or trunk-to-line connection. Minimum return losses shall be:

20 dB @ 200-500 Hz
26 dB @ 500-1000 Hz
30 dB @ 1000-3400 Hz

6.6 Longitudinal Balance

[Required: TS (trunks only), MFS, EOS, SMEO, PBX1, PBX2] The longitudinal balance shall meet the requirements shown in Table 6-8. At 3400 Hz, the minimum balance shall be 50 dB. The method of measurement shall be as specified in the IEEE Standard 455-1985, Standard Testing Procedures for Measuring Longitudinal Balance of Telephone Equipment Operating in the Voice Band.

Table 6-8. Longitudinal Balance

Connection	Longitudinal Balance (dB)		
	f(Hz)	Avg	Min
All connection types between analog interfaces	200	63	58
	500	63	58
	1000	63	58
	3000	58	53

6.7 60 Hz Longitudinal Current

[Required: TS (trunks only), MFS, EOS, SMEO, PBX1, PBX2] Under test conditions with 60 Hz, the system noise shall be no greater than 23 dBrnC0. (This requirement shall also apply at 50 Hz.)

6.8 Idle Channel Noise

[Required: TS (trunks only), MFS, EOS, SMEO, PBX1, PBX2] Idle channel noise consists of C-Message Weighting and Flat Weighted.

6.8.1 C-Message Weighting

[Required: TS (trunks only), MFS, EOS, SMEO, PBX1, PBX2] Ninety-nine percent of the connections shall have C-message weighting noise less than or equal to the values shown in Table 6-9.

Table 6-9. C-Message Waiting

Connection	Average	Noise (dBrnC0) 99 percent
Analog-analog	20	23
Analog-digital	17	20
Digital-analog	17	20

6.8.2 Flat-Weighting Noise

[Required: TS (trunks only), MFS, EOS, SMEO, PBX1, PBX2] The mean of the idle channel noise distribution (C-Message and Flat Weighting) shall be less than or equal to 35 dBrn0, as measured with a 3 kHz flat weighting. The 99 percent point on the idle channel noise distribution shall be less than 39 dBrn0 when measured with a 3-kHz flat weighting.

6.9 Power Line Interference

[Required: TS (trunks only), MFS, EOS, SMEO, PBX1, PBX2] The power line frequencies, harmonics of power line frequencies, and noise introduced through the power supply shall have an RMS sum at least 55 dB below test tone level.

6.10 Impulse Noise

[Required: TS (trunks only), MFS, EOS, SMEO, PBX1, PBX2] The C-notched impulse noise shall not exceed 54 dBrnc0 with tone and 47 dBrnc0 without tone in a five-minute period on six measurements made during the busy hour. Measurement shall be taken using an impulse noise counter. The measurement shall be made by taking six random normal connections from voice frequency circuits through the switching equipment.

6.11 Crosstalk Coupling

[Required: TS (trunks only), MFS, EOS, SMEO, PBX1, PBX2] Worst case equal level crosstalk is to be 70 dB minimum in the range 200 to 3400 Hz. This is to be measured between any two paths through the system connecting a 0 dBm0 level tone to the disturbing pair. Crosstalk loss between the two directions of a circuit shall be 50 dB minimum in the range of 200 to 3400 Hz when measured at equal level points.

6.12 Intermodulation Distortion

[Required: TS (trunks only), MFS, EOS, SMEO, PBX1, PBX2] Intermodulation distortion, measured using the standard 4-tone test method, shall meet the requirements shown in Table 6-10.

Table 6-10. Intermodulation Distortion

Connection	Second-Order (dB)		Third-Order (dB)	
	95 percent	Min	95 percent	Min
Line, remote line,2-Wire to line, remote line, 2-wire	44	43	45	44
Line, remote line, 2-wire to 4-wire	46	45	48	47
4-wire to 4-wire	50	49	52	51

Connection	Second-Order (dB)		Third-Order (dB)	
	95 percent	Min	95 percent	Min
Digital Interface to Line, remote line, 2-wire	47	46	50	49
Digital Interface to 4-wire	53	52	57	56

6.13 Signal To Distortion Ratio (C-Notched Noise)

[Required: TS (trunks only), MFS, EOS, SMEO, PBX1, PBX2] At least 99 percent of the connections of each connection type shall have a signal to distortion greater than or equal to the values shown in Table 6-11.

Table 6-11. Signal-to-Noise Distortion

Sinewave Input (dBmO)	Sinewave Freq. (Hz)	Analog to Analog	Analog to Digital Digital to Analog
0 to -30	200-3400	33	35
-40	200-3400	27	29
-45	200-3400	22	25

6.14 Absolute Delay

[Required: TS (trunks only), MFS, EOS, SMEO, PBX1, PBX2] The absolute one-way delay through the switch, excluding delays associated with RSU switching shall not exceed 600 microseconds analog-to-analog measured at 1800 Hz.

6.15 Envelope Delay Distortion

[Required: TS (trunks only), MFS, EOS, SMEO, PBX1, PBX2] The envelope delay difference between any two adjacent frequencies between 1000 and 2600 Hz shall not exceed 20 microseconds. On any properly established connection, the envelope delay distortion shall not exceed the limits shown in Table 6-12.

Table 6-12. Envelope Delay Distortion Limits

Band Widths (HZ)	Microseconds
1000 to 2600	190
800 to 2800	360
600 to 3000	500

400 to 3200	700

6.15.1 Echo Path Delay

[Required: TS (trunks only), MFS, EOS, SMEO, PBX1, PBX2] Echo path delay is twice the one-way transit time delay of a signal through a switching system connection path. Ninety-nine percent of the connections of each connection type shall have echo path delay less than or equal to the following values. The values shown in Table 6-13 shall apply at the frequency at which the minimum delay occurs.

Table 6-13. Echo Path Delay

Connection Type	Echo Path Delay (ms)
Digital Interface to Digital Interface	1.4
Digital Interface to Line, 2-wire, or 4-wire	1.9
Line to Line, 2-wire, 4-wire;2-wire, 4-wire to 2-wire, 4-wire; Remote Line to Remote Line (Intra)	2.4
Digital Interface to Remote Line	4
Remote Line to line, 2-wire, 4-wire	4
Remote Line to Remote Line (Inter)	6.5

6.16 Bit Integrity

[Required: TS (trunks only), MFS, EOS, SMEO, PBX1, PBX2] The capability to transmit bit streams end-to-end through the network without inserting or deleting any bits in the digital bit stream is a requirement. Switched Data or ISDN shall not employ digital processing to insert transmission losses.

6.17 Switched Digital Bit Error Rate

[Required: TS (trunks only), MFS, EOS, SMEO, PBX1, PBX2] The digital switching system shall not introduce an error into the digital connections that is greater than one error in 10^9 (one billion) bits averaged over a 9 hour period measured at the DS0 rate.

6.18 Encoding And Decoding Levels

[Required: TS (trunks only), MFS, EOS, SMEO, PBX1, PBX2] The DSN uses a fixed loss transmission plan. To provide compatible transmission level interface to other networks, and to accommodate different Transmission Level Point (TLP) reference at analog and digital switching centers, the digital switching center shall provide the capability to selectively set the encoding and decoding levels at the A/D and D/A converters.

6.18.1 DSN Fixed Loss Plan

[Required: TS (trunks only), MFS, EOS, SMEO, PBX1, PBX2] A fixed loss plan provides a coherent means for implementing engineered loss into the digital network. In an all-digital network, it is no longer necessary to compute loss on a trunk-by-trunk basis, as is done in an analog network. Loss assignments on individual digital trunks require either a digital to analog to digital conversion for the use of an analog pad or a digital code conversion within the software of a switching system that implements the desired value of loss. The approach used in the DSN is to provide a fixed end-to-end loss that varies depending on the type of connection (e.g., intra-EOS or EOS to EOS). The end-to-end losses required for the various types of connections are shown in Table 6-14.

Table 6-14. End-to-End Loss

Connection Type	End-to-End Loss
EOS to EOS	
Via MFS	6 dB
Via C0I	
≤ 200 miles	3 dB
> 200 miles	6 dB
Intra-EOS	0 dB

6.18.1.1 Switch Transmission Level Points (TLPs).

[Required: TS (trunks only), MFS, EOS, SMEO, PBX1, PBX2] To implement the fixed loss plan, each DSN switch shall have a specified TLP reference. A TLP is defined as a point in the transmission system at which the ratio of power of the test signal at that point to the power of the test signal at a reference point is specified. The designated reference point is the zero dB TLP or simply 0 TLP. The standard reference point for the 0 TLP is the outgoing trunk appearance, or transmit side of an end office. The transmission level for an MFS is -3 TLP, where the standard reference point is also on the transmit side of the switch.

SECTION 7 - System Interfaces

7.0 Introduction

This section is an overview of the digital and analog interfaces required in the DSN. The digital interfaces described are applicable to all digital connections associated with the DSN switching system and subsystems. These include access lines to EOS's and PBX switching systems, and any off-network trunk connections or ISTs. The analog interfaces apply to EOS trunks, ISTs, and off-network trunk connections.

7.1 PCM-24 Digital Trunk Interface

[Required: TS, MFS, EOS, SMEO, PBX1, PBX2] DSN switches shall provide a PCM-24 channel digital interface with a 1.544 Mb/s T1 bit stream configured in either the D3/D4 (Super Frame) framing format or the D5 Extended Super Frame (ESF) framing format. D5 is also referred to as Extended Frame (EF). The same framing format shall be used in both directions of transmission. Voice signals shall be encoded in the 8-bit Mu (255 quantized values) pulse code modulation (PCM) encoding law. Supervisory and dial pulse (DP) signals shall utilize the A and B bits of the D3/D4 format or the A, B, C, and D bits of the D5 format for pre-CCS7 configurations. Voice channel address in-band signaling shall be provided on individual channels. The D5 format shall be the preferred and system "goal" digital framing format and shall be provided in accordance with MIL-STD-187-700.

7.1.1 Interface Characteristics

[Required: TS, MFS, EOS, SMEO, PBX1, PBX2] The DSN switching system shall use the DS1 24 channel standard interface as specified in ANSI T1.102, "*Digital Hierarchy – Electrical Interfaces*". Table 7-1 provides the electrical characteristics at the interface and Tables 7-2 and 7-3 provide a listing of the framing characteristics.

Table 7-1. PCM-24 Electrical Interface Characteristics

Nominal Line Rate	1.544 Megabits per second.
Line Rate Accuracy	In a self-timed, free running mode, the line rate accuracy shall be ± 50 bits/s (± 32 parts per million) or better.
Line Code	B8ZS (Bipolar with 8-Zero Substitution) Bipolar/Alternate Mark Inversion may be used until Clear Channel Capability is required.
Frame Structure	ESF (D5) or transitionally D3/D4
Medium	One balanced twisted pair shall be used for each direction of transmission.
Pulse Amplitude	The amplitude of an isolated pulse shall be between 2.4 volts and 3.6 volts.
Pulse Shape	The shape of every pulse that approximates an isolated pulse (is preceded by four zeros and followed by one or more zeros) shall conform to the mask in figure F10/G703 of ITU-T Recommendation G.703.

Pulse Imbalance	In any window of seventeen consecutive bits, the maximum variation in pulse amplitudes shall be less than 200mV, and the maximum variation in pulse widths (half amplitude) shall be less than 20 ns.
Power Level	For an all-ones signal, the power in a 3 kHz band centered at 772 kHz shall be between 12.6 dBm and 17.9 dBm. The power in a 3 kHz $\pm$ 1 kHz band centered at 1544 kHz shall be at least 29 dB below that at 772 kHz.
Jitter	Where one Unit Interval (UI) is equal to 648 ns, the jitter of the signal shall not exceed the following limits, in both bands simultaneously: 1) Band 1 - 5.0 UIs, peak-to-peak, and 2) Band 2 - 0.1 UIs, peak-to-peak. Band 1 equals 10 Hz to 40 kHz. Band 2 equals 8 kHz to 40 kHz.
DC Power	There shall be no dc power applied to the interface.

Table 7-2. PCM-24 D3/D4 Interface Characteristics

Frame Organization	24 8-bit PCM words, plus 1 framing bit, in 125 microseconds.
Channel PCM Word	Frames 1 through 5: 8-bit encoded voice sample.
	Frame 6: 7-bit encoded voice sample; least significant bit is the "A" signaling bit.
	Frames 7 through 11: 8-bit encoded voice sample.
	Frame 12: 7-bit encoded voice sample; least significant bit is the "B" signaling bit.
Channel Sampling Rate	8000 times per second.
Channel Time Slot	5.18 microseconds.
Bit Time Slot	648 nanoseconds.
Framing Bit Pattern	Terminal Framing Bit: "101010" in odd-numbered frames (1, 3, 5, 7, 9, 11).
	Signaling Framing Bit: "001110" in even-numbered frames (2, 4, 6, 8, 10, 12).
Maximum Reframe Time	The DSN will reframe on the average within 50 milliseconds after an error free signal is restored.

Table 7-3. PCM-24 ESF Interface Characteristics	
D5 Extended Super Frame Format Framing Characteristics	
Frame Organization	24 8-bit PCM words, plus 1 framing bit, in 125 microseconds.
Channel PCM Word	Frames 1 through 5: 8-bit encoded voice sample.
	Frame 6: 7-bit encoded voice sample; least significant bit is the "A" signaling bit.
	Frames 7 through 11: 8-bit encoded voice sample.
	Frame 12: 7-bit encoded voice sample; least significant bit is the "B" signaling bit.
	Frames 13 through 17: 8-bit encoded voice sample.
	Frame 18: 7-bit encoded voice sample; least significant bit is the "C" signaling bit.
	Frames 19 through 23: 8-bit encoded voice sample.
	Frame 24: 7-bit encoded voice sample; least significant bit is the "D" signaling bit.
Channel Sampling Rate	8000 times per second.
Channel Time Slot	5.18 microseconds.
Bit Time Slot	648 nanoseconds.
Framing Bit Pattern	Frame and Super Frame Synchronization Bit: 001011 (frames 4, 8, 12, 16, 20, 24).
	CRC Bit (frames 2, 6, 10, 14, 18, 22).
	Data Channel Link Bit (odd numbered frames 1, 3, 5, 7, 9, 11, 13, 15, 17, 19, 21, 23).
Maximum Reframe Time	The DSN will reframe on the average within 50 milliseconds after an error free signal is restored.

7.1.2 Supervisory Channel Associated Signaling

[Required: TS, MFS, EOS, SMEO – Conditional: PBX1, PBX2] On-hook and off-hook status of each channel is transmitted and derived from the coding of the "A" and "B" signaling bits. Trunk seizure, answer supervision, DPs, preemption signals and all other trunk supervisory information shall be sent and received on a per-channel basis using this scheme. Per-trunk signaling in the DSN switching system shall control the value of the "A" and "B" bits to indicate an on-hook ("A" = 0, "B" = 0) or an off-hook ("A" = 1, "B" = 1) condition. When receiving supervisory status on digital trunks using the PCM-24 format, the DSN switching system shall interpret the combination of the "A" bit = 0 and the "B" bit = 0 as on-hook, and the combination "A" bit = 1 and "B" bit = 1 as an off-hook indication. When signaling on VF channels using the PCM-24 format, the least significant bit of each channel, every six frames, shall carry signaling information. Utilizing the four-state signaling option of the Super Frame (D3) format, frame 6 shall contain the "A" channel signaling information and frame 12 shall contain the "B" channel signaling information. The switching system shall also interpret the combination of "A" bit = 1, "B" bit = 0, with bit position 2 in all 24 channels in the Super Frame (D3) format equal to "0" as a channel alarm indication and shall also interpret the combination of "A" bit = 1, "B" bit = 0 as a remote make busy.

In the Extended Super Frame (ESF) format ANSI defines a sixteen-state signaling option that labels the signaling bits "A" (frame 6), "B" (frame 12), "C" (frame 18), and "D" (frame 24). Because DSN does not require the "C" and "D" signaling channels the four-state option shall be used to allow changes in "A" and "B" signaling states to be transmitted twice as often. Utilizing Frames 6 and 18 in the 24-frame Extended Super Frame shall contain the "A" channel signaling information; frames 12 and 24 shall contain the "B" channel signaling information.

7.1.3 Clear Channel Capability (CCC).

[Required: TS, MFS, EOS, SMEO, PBX1 - Conditional: PBX2] DSN switches shall be capable of transmitting and receiving B8ZS line coding in accordance with MIL-STD-187-700.

7.1.4 Alarm and Restoral Requirements.

[Required: TS, MFS, EOS, SMEO, PBX1 - Conditional: PBX2] The DSN switching system shall provide the alarm and restoral features on the digital interface unit (DIU defined in Table 7-4).

Table 7-4. PCM-24 Alarm and Restoral Requirements

LOCAL ALARM TIMING	The DSN PCM-24 DIU (digital interface unit) will enter the "LOCAL" or "RED" alarm state when it is unable to frame on the received PCM signal, or the received signal is lost, for 2.5 ± 0.5 seconds.
RECEPTION OF REMOTE ALARM	The DSN PCM-24 DIU will detect a "REMOTE" or "YELLOW" alarm condition when bit 2 of all 24 channels of Super Frame is set to a zero and when the "YELLOW" alarm is sent via the facility data link of Extended Super Frame. Within 35 to 1000 milliseconds after detecting the REMOTE alarm, the DSN switch will: Release all connections on the affected DIU, AND Remove the affected circuits from service.
TRANSMISSION OF REMOTE ALARM	When the DSN PCM-24 DIU enters the LOCAL alarm state, it will send REMOTE alarm toward the connecting equipment by forcing bit 2 to a zero on all 24 channels of Super Frame.
RESTORAL TO SERVICE FROM LOCAL ALARM	Within 15 ± 5 seconds after a valid PCM signal is restored, the DSN DIU will: Remove the REMOTE alarm being sent to the connecting equipment, AND Return the affected circuits to service.
RESTORAL TO SERVICE FROM REMOTE ALARM	Within 20 to 1000 milliseconds after the connecting equipment removes the REMOTE alarm, the DSN switch DIU will restore the affected circuits to service.

7.2 PCM-30 Digital Trunk Interface

[Required: TS, MFS, EOS, SMEO - Conditional: PBX1, PBX2] This requirement only applies to switches implemented in Europe. The DSN switches used in DISN-E shall provide PCM-30 digital interfaces at a data rate of 2.048 Mb/s. The PCM-30 interfaces shall meet the requirements of ITU-T Recommendation G.703, "*Physical/Electrical Characteristics of Hierarchical Digital Interfaces at 1544, 2048, 8448, and 44736 kbit/s Hierarchical Levels*" and ITU-T Recommendation G.732, "*Characteristics of Primary PCM Multiplex Equipment Operating at 2048 kbit/s*". Voice signals in the PCM-30 framing format shall utilize the A-law encoding technique in accordance with ITU-T Recommendation G.772 (REV), "*Protected Monitoring Points on Digital Transmission Systems*." The pertinent requirements for the PCM-30 interface are summarized in Table 7-5. Table 7-6 shows the allocation of time slot 16 for channel associated signaling.

Table 7-5. PCM-30 Electrical Interface Characteristics

Nominal Line Rate	2.048 Megabits per second.
Line Rate Accuracy	In a self-timed, free running mode, the line rate accuracy shall be ± 102 bits/s (± 50 parts per million) or better.
Line Code	HDB3.
Frame Structure	Frame structure details appear in ITU-T G.704.
Medium	One balanced twisted pair shall be used for each direction of transmission.
Pulse Amplitude	The amplitude of an isolated pulse shall be between 2.2 volts and 3.3 volts.
Pulse Shape	The shape of every pulse that approximates an isolated pulse (is preceded by three zeros and followed by one or more zeros) shall conform to the mask in figure 15/G703 of ITU-T Recommendation G.703.
Pulse Imbalance	The ratio of amplitudes of positive and negative isolated pulses shall be between 0.95 and 1.05.
Power Level	For an all-ones signal, the power in a 3 kHz± 1 kHz band centered at 1.024 MHz shall be between 13.7 dBm and 17.5 dBm. The power in a 3 kHz ± 1 kHz band centered at 2.048 MHz shall be at least 20 dB below that at 1.024 MHz.
Jitter	Where one Unit Interval (UI) is equal to 488 ns, the jitter of the signal shall not exceed the following limits, in both bands simultaneously: 1) Band 1 - 5.0 UIs, peak-to-peak, and 2) Band 2 - 0.1 UIs, peak-to-peak. Band 1 equals 10 Hz to 40 kHz. Band 2 equals 8 kHz to 40 kHz.
dc Power	There shall be no dc power applied to the interface.
Frame	32 channels (numbered 0 to 31) with 8 bits (numbered 1 to 8) per channel.
Organization	PCM words. Frame alignment occupies bit positions 2 through 8 of channel 0, of every other frame.
Multiframe Organization	16 consecutive frames, numbered from 0 to 15.
Channel Sampling Rate	8000 times per second.
Channel PCM Word	Channel time slots 1 to 15, and 17 to 31, are assigned to telephone channels 1 to 30.
Channel Time Slot	3.91 microseconds.
Tolerance	± 50 ppm on line rate of 1.544 megabits per second.

Bit Time Slot	488 nanoseconds.
Framing Bit Pattern	Bits 2 through 8 of channel 0, every other frame, contains the "0011011" frame alignment signal. To avoid falsely locking to the data contained in channel 0 for frames not containing the frame alignment signal, bit 2 of channel 0 is always a "1" in those frames.
Multiframe Alignment	The multiframe alignment signal is "0000" and occupies digit time slots 1 to 4 of channel time slot 16 in frame 0.
Framing Strategy	Frame alignment is assumed to be lost if 3 of 4 consecutive frame alignment signals are received with an error.
Reframing Algorithm	Frame alignment is assumed to be recovered if the next frame has a "1" in bit 2 of channel 0 and valid framing is present in the frame after that.
Multiframe Loss and Recovery	Multiframe alignment is assumed to be lost when two consecutive multiframe alignment signals are received in error. Multiframe alignment is assumed to be restored when the first correct multiframe alignment signal is detected.

Table 7-6. Allocation Of Time Slot 16

Channel time slot 16 of frame 0	**Channel time slot 16 of frame 1**		**Channel time slot 16 of frame 2**		**. . . . .**	**Channel time slot 16 of frame 15**	
0000 xyxx	ABCD Channel 1	ABCD Channel 16	ABCD Channel 2	ABCD Channel 17		ABCD Channel 15	ABCD Channel 30
Note: x = spare bit to be made 1 if not used. y = bit used to indicate loss of multiframe alignment (REMOTE alarm).							
When bits B, C, or D are not used they shall have the value: B = 1 C = 0 D = 1							
The combination 0000 of bits A, B, C, and D shall not be used for signaling purposes for channels 1-15.							

7.2.1 Supervisory Channel Associated Signaling

[Required: TS, MFS, EOS, SMEO - Conditional: PBX1, PBX2] When receiving supervisory status on digital trunks using the PCM-30 format, the DSN switching system shall interpret the combination of the "A" signaling channel bit = 1 and the "B" signaling channel bit = 1 as on-hook, and shall interpret the combination of the "A" signaling channel bit = 0 and the "B" signaling channel bit = 1 as an off-hook indication. The DSN switching system shall also interpret the combination of "A" bit = 1 and "B" bit = 0 as a channel alarm indication and a remote make busy. Bits "C" and "D" are not used in the DSN for signaling or control and therefore shall be set to the values "C" = 0 and "D" =1 in accordance with ITU-T Recommendation G.704.

7.2.2 Alarm and Restoral Requirements

[Required: TS, MFS, EOS, SMEO - Conditional: PBX1, PBX2] The DSN switching system shall provide the alarm and restoral features shown in Table 7-7.

Table 7-7. PCM-30 Alarm And Restoral Requirements	
LOCAL ALARM TIMING	The DSN PCM-30 DIU shall enter the "LOCAL" or "RED" alarm state when framing is lost, or the incoming signal is lost, for 4.5 ± 0.5 seconds.
RECEPTION OF REMOTE ALARM	The DSN PCM-30 DIU shall detect a "REMOTE" or "YELLOW" alarm condition when bit 3 of channel time slot 0 in those frames not containing the frame alignment signal is set to a "1," and will interpret this transition as a remote alarm from the connecting equipment. Within 35 to 1000 ms after detecting the REMOTE alarm, the DSN switch will: Release all connections on the affected DIU, AND Remove the affected circuits from service.
TRANSMISSION OF REMOTE ALARM	When the DSN PCM-30 DIU enters the LOCAL alarm state, it shall send within 2 ms a REMOTE alarm toward the connecting equipment by changing bit 3 channel time slot 0 from a "0" to a "1" in those frames not containing the frame alignment signal.
RESTORAL TO SERVICE FROM LOCAL ALARM	Within 15 ± 5 seconds after a valid PCM signal is restored, the DSN switch shall: Remove the REMOTE alarm being sent to the connecting equipment, AND Return the affected circuits to service.
RESTORAL TO SERVICE FROM REMOTE ALARM	Within 20 to 1000 ms after the connecting equipment removes the REMOTE alarm, the DSN switch shall restore the affected circuits to service.

7.3 Interoperation of PCM-24 and PCM-30 Systems

[Required: TS, MFS, EOS, SMEO - Conditional: PBX1, PBX2] Interoperation of PCM-24 and PCM-30 transmission shall occur internal to DSN switching equipment. The internal architecture of the DSN switch shall perform the required A-law-to-Mu-law conversions necessary to switch or cross-connect time slot data, regardless of the source. The conversion shall be accomplished in accordance with ITU-T Recommendation G.711, "*Pulse Code Modulation (PCM) of Voice Frequencies – General Aspects of Digital Transmission Systems*."

7.4 Analog Trunk Interface

[Conditional: TS, MFS, EOS, SMEO, PBX1, PBX2] The DSN switching system shall provide analog trunk circuits that interface to industry standard signaling and facility arrangements.

7.4.1 E&M Trunk Circuits

[Conditional: TS, MFS, EOS, SMEO, PBX1, PBX2] The DSN switching system shall interface with exchange carriers using industry standard E&M signaling. The switching system shall

interface with Type I and Type II E&M signaling in accordance with Paragraph 9 and subparagraphs of GR-506-CORE. The switching system shall interface with Type V E&M signaling as defined in Paragraphs 6.8.5, 6.8.6, 6.8.7.2, 6.8.8.2, and 6.8.8.3 of Telcordia Technologies Document SR-2275. The DSN switch analog trunk interface shall always originate on the M-lead.

7.4.2 Single Frequency (SF) Trunk Circuits

[Conditional: TS, MFS, EOS, SMEO, PBX1, PBX2] The DSN will interface with external SF equipment using a four-wire E&M trunk circuit, either Type I or II. DSN in-band signaling equipment utilizing SF will place a 2600 Hz tone on the circuit to indicate the idle state (on-hook) and the tone will be removed from the circuit to indicate the busy state (off-hook). Signaling states will be conveyed via E and M leads (Type I or II) to the telephone equipment terminating the circuit on the equipment side of the interface. The SF trunk interface consists of only the voice path conductors (T, R, T1, R1), but at a point between this transmission facility interface and the switching function the SF signal will be translated back to the two-state dc signals.

7.4.3 Dual Frequency (DF) Trunk Circuits

[Conditional: TS, MFS, EOS, SMEO, PBX1, PBX2] The Dual Frequency Signaling Unit (DFSU) equipment used in the DSN operates in much the same way as an SF unit, except that whenever the 2600 Hz tone is removed from the circuit a 2800 Hz tone is applied for a short period (175 ms maximum). The 2800 Hz tone burst will serve as a confirmation tone; the receiving signaling unit will only transition from on-hook to off-hook if the loss of the 2600 Hz tone is followed by the 2800 Hz tone. This prevents false on-hook to off-hook transitions from occurring due to a break in the communications circuit. Like the SF trunk interface, the DF trunk interface will consist of only the voice path conductors (T, R, T1, R1). The DSN switch shall interface an external DFSU using a four-wire E&M trunk circuit with Type I or II E&M signaling. This connection is on the equipment-side of a DF trunk interface.

7.5 Integrated Digital Loop Carrier (IDLC)

[Required: TS, MFS, EOS, SMEO - Conditional: PBX1, PBX2] The DSN switching system shall interface with IDLC equipment in accordance withTelcordia Technologies GR-303-CORE, *System Generic Requirements, Objectives, and Interface*, December 2000, Issue 4.

SECTION 8 - Tandem Switching

8.0 Introduction

[Required: TS, MFS] This section contains the tandem switching requirements for DSN Multifunction Switches (MFS) and Tandem Switches (TS). It is based on *the Telcordia Technologies LSSGR: Tandem Supplement* (GR-540-CORE), Issue 2, March 1999. The requirements in this section apply to systems using existing analog or digital technology. LSSGR Features and capabilities which require modification for use in the DSN are described as are Military Unique Features.

8.1 Network Plan

[Required: TS, MFS] Tandem switching systems provide a means of routing traffic in an orderly manner and make economic use of trunks and switching equipment, where otherwise, many small separate trunk groups would be necessary. The switch performs trunk-to-trunk switching for the purpose of concentrating traffic for the centralization of services.

8.2 System Architecture

The switching system architecture is largely a function of technology. DSN switching systems are digital and interface with both digital and analog access lines and trunks. The DSN architecture is described in Section 1 of this GSCR.

8.3 Tandem Capabilities

[Required: TS, MFS] DSN switching systems requiring tandem switching features and functions shall provide the features and functions shown in Table 8-1 and defined in the *Telcordia Technologies LSSGR: Tandem Supplement* (GR-540-CORE), Issue 2, March 1999, paragraph 4.1. LSSGR features not shown in Table 8-1 are not required.

Table 8-1. Tandem Features

Feature Definition #	Description	GR-540-CORE Section
60-00-0000	**Tandem Features**	**Section 4.2.1**
60-01-0000	**Access Tandem Office Trunks**	**Section 4.2.2**
60-01-0100	Tandem Connecting Trunks	Section 4.2.3
60-01-0101	DDD Access (DD) Trunks	Section 4.2.3.1
60-01-0104	Tandem Completing (TC) Trunks	Section 4.2.3.3
60-01-0106	Two-way Tandem connecting Trunks (Not Coded)	Section 4.2.3.4
60-01-0200	Intertandem Trunks	Section 4.2.4
60-01—0500	Special Service Trunks	Section 4.2.5
60-01-0501	Direct Inward Dial (DID)	Section 4.2.5.1
60-02-0000	**Call Processing Features**	**Section 4.2.6**
60-02-0100	Trunk-to-Trunk Test Connections	Section 4.2.6.1
60-02-0200	3-Digit Translation	Section 4.2.6.2
60-02-0202	NXX Office and Special Purpose Codes	Section 4.2.6.3
60-02-0203	NXX Area Codes	Section 4.2.6.2
60-02-0300	6-Digit Translation	Section 4.2.6.2
60-02-0400	Digit Deletion	Section 4.2.6.3
60-02-0500	Digit Prefixing	Section 4.2.6.3
60-02-0600	Code Conversion	Section 4.2.6.3
60-02-0900	Capability for Satellite Connections	Section 4.2.6.5
60-02-1000	Recorded Announcement Service (Tandem)	Section 4.2.6.6
60-02-1100	Overlap Outpulsing	Section 4.2.6.7

Table 8-1. Tandem Features (continued)

Feature Definition #	Description	GR-540-CORE Section
60-02-1200	Vacant Code Screening	Section 4.2.6.8
60-02-1300	Trunk Class Screening	Section 4.2.6.9
60-03-0000	**Tandem Signaling**	**Section 4.2.7**
60-03-0100	Common Channel Signaling	Section 4.2.7.1
60-03-0200	Inband Trunk Signaling (Tandem)	Section 4.2.7.2
60-04-0000	**Line and Trunk Test Features**	**Section 4.2.8**
60-04-0100	Test Lines	Section 4.2.8.1
60-04-0101	All 10X-Type Test Lines Used on End Offices	Section 4.2.8.1.1
60-04-0102	103-Type Tests Line	Section 4.2.8.1.2
60-04-0103	104-Type Tests Line	Section 4.2.8.1.3
60-04-0104	108-Type Tests Line	Section 4.2.8.1.4
60-04-0105	109-Type Tests Line	Section 4.2.8.1.5
60-04-0200	Multiple Trunk Test Capability	Section 4.2.8.2
60-04-0600	FX Line for ROTL in Tandem Offices	Section 4.2.8.3
60-04-0700	Two-way Trunk Maintenance	Section 4.2.8.4
60-04-0900	Continuity Check of the SWITCH Voice Path	Section 4.2.8.5
60-05-0000	**Network Management Features**	**Section 4.2.9**
60-05-0102	Trunk Reservation	Section 4.2.9.1.1
60-05-0105	Automatic Out-of-Chain Routing	Section 4.2.9.1.2
60-05-0200	Manual Network Management Controls	Section 4.2.9.1.3
60-05-0201	Code Controls	Section 4.2.9.1.4
60-05-0202	Trunk Group Controls	Section 4.2.9.1.5
60-05-0203	Administration of Hard-to-Reach Codes	Section 4.2.9.1.6
60-05-0300	Network Management Surveillance Data	Section 4.2.9.1.7
60-05-0400	NTM OS/NE Interface	Section 4.2.9.1.8
60-05-0401	NM Audits and Alerts	Section 4.2.9.1.9

Table 8-1. Tandem Features (continued)

Feature Definition #	Description	GR-540-CORE Section
60-05-0402	Message Administration	Section 4.2.9.1.10
60-05-0500	Backup Network Management Capabilities	Section 4.2.9.1.11
60-05-0600	Trunk Directionalization	Section 4.2.9.1.12
60-06-0000	Billing	Section 4.2.10
60-10-0200	Echo Cancelers	Section 4.2.12

8.4 Call Processing

[Required: TS, MFS] DSN switching systems which require tandem features and capabilities shall meet the call processing requirements in the *Telcordia Technologies LSSGR: Tandem Supplement* (GR-540-CORE), Issue 2, March 1999, Paragraph 5 and all its subparagraphs. In addition, tandem switching systems shall meet the call processing requirements in Section 4 of this GSCR.

8.5 Signaling

[Required: TS, MFS] DSN switching systems which require tandem features and capabilities shall meet the signaling requirements Section 5 of this GSCR.

8.6 Transmission

[Required: TS, MFS] DSN switching systems which require tandem features and capabilities shall meet the transmission requirements in Section 6 of this document.

8.7 Measurements and Administration

[Required: TS, MFS] DSN switching systems with tandem functions and capabilities shall meet the switching system maintenance, circuit and facility maintenance, and maintenance measurement requirements in the *Telcordia Technologies LSSGR: Tandem Supplement* (GR-540-CORE), Issue 2, March 1999, paragraph 9 and all its subparagraphs and Sections 7 & 8 of this GSCR. Centralized Automatic Message Accounting (CAMA) shall not be required.

8.8 Service Standards

[Required: TS, MFS] DSN switching systems with tandem features and capabilities shall meet the service standards in the *Telcordia Technologies LSSGR: Tandem Supplement* (GR-540-CORE),

Issue 2, March 1999, Chapter 11 with the exception of CAMA. In addition, DSN tandem switching systems shall provide non-blocking service.

8.9 Network Management (NM)

[Required: TS, MFS] DSN switching systems with tandem features and capabilities shall meet the network management requirements specified in Section 9 of this GSCR.

SECTION 9 - Network Management

9.0 Introduction

DISA has developed a network management system to monitor and control the Global Defense Switched Network (DSN). This system, the Advanced DSN Integrated management Support System (ADIMSS), is fielded and operational. It was developed by drawing upon the framework setup by the LSSGR for telephone switch management within the public telephone system network. However, DISA realizes that many of the switching systems being deployed in the DSN today were neither intended nor designed to function as part of the public telephone network infrastructure. Therefore, DISA developed the requirements in this section to specifically address the Network Management (NM) requirements of telephone switches to be used within the DSN.

The NM functions covered in this section are:

- Fault Management
- Configuration Management
- Accounting Management
- Performance Management
- Network Management Controls
- Remote Access to the switch

9.1 DISA/DSN Network Management

[Required: TS, E0, SMEO, MFS] DSN switching systems shall provide DSN NM data to the DISA ADIMSS via one of the three following physical interfaces:

- Ethernet/TCP/IP (IEEE 802.3)
- Serial (RS-232)/Asynchronous
- Serial/Synchronous (X.25 and/or BX.25 variant)

All data that is collected shall be accessible through these interfaces. For DSN Network Management purposes the telephone switch must provide four separate data channels. They may be physically separate (e.g., four distinct physical interface points) or logically separate (e.g., four user sessions through a single Ethernet interface). The data may be sent in ascii, binary, or hexadecimal data or ascii text designed for screen/printer display.

The data channels shall be used for and, as such, must be capable of providing:

- Alarm/Log Data
- Performance Data (e.g., traffic data)

- Accounting Data (e.g., Call Detail Recording)
- Switch access (to perform switch data fill administration and network controls)

9.2 Measurements and Data Generation

This section contains the Measurements and data generation requirements that shall be collected by DSN switching systems. The measurements and data collected are used to maintain, manage, and engineer the DSN.

9.2.1 Common Data Requirements

9.2.1.1 Data Quality

[Required: TS, MFS, EOS, SMEO] DSN switching systems shall meet the data quality and data presentation requirements in Telcordia Technologies Generic Requirements, GR-478-CORE, Issue 4, February 2000, Section 2, paragraphs 2.3 and 2.4. The SMEO is not required to meet the 30 second and 5 minute Traffic Data Reporting Requirements in GR-478-CORE, paragraph 2.4.1, Table 2-1. However, SMEOs shall meet the 15 or 30 or 60 minute, and daily reporting requirements.

9.2.2 Circuit Switched Network Measurements

9.2.2.1 Basic Switch Performance

DSN switching systems shall meet the following switch performance requirements in Telcordia Technologies Generic Requirements, GR-478-CORE, Issue 4, February 2000, Section 3.1.

9.2.2.1.1 Traffic Measurements

[Required: TS, MFS, EOS] DSN switching systems shall meet the traffic measurement requirements in Telcordia Technologies Generic Requirements, GR-478-CORE, Issue 4, February 2000, Section 3, Paragraph 3.1.1.

[Required: SMEO] DSN switching systems shall provide traffic measurements for the following:

- Provide the required Traffic NM data in either 5, 15, 30 or 60 min increments
- Trunk Group Number
- Trunks Equipped
- Outgoing Attempts
- Outgoing Overflows
- Trunk Group Usage (in seconds or hundred call seconds (CCS))
- Total Trunk Group Usage or Outgoing and Incoming Trunk Group Usage
- Switch Database Access

9.2.2.1.2 Reference Data

[Required: TS, MFS, EOS - Conditional: SMEO] DSN switching systems shall meet the reference data optional requirements in Telcordia Technologies Generic Requirements, GR-478-CORE, Issue 4, February 2000, Section 3, Paragraph 3.1.3.

9.2.2.2 Line Servicing

[Required: TS, MFS, EOS – Conditional: SMEO] DSN switching systems shall meet the line servicing requirements in Telcordia Technologies Generic Requirements, GR-478-CORE, Issue 4, February 2000, Section 3.2.

9.2.2.3 Trunk Groups

[Required: TS, MFS, EOS - Conditional: SMEO] DSN switching systems shall meet the trunk group requirements in Telcordia Technologies Generic Requirements, GR-478-CORE, Issue 4, February 2000, Section 3.3.

9.2.2.4 Call Processor

[Required: TS, MFS, EOS - Conditional: SMEO] DSN switching systems shall meet the call processor requirements in Telcordia Technologies Generic Requirements, GR-478-CORE, Issue 4, February 2000, Section 3.4.

9.2.2.5 Switch Services

[Required: TS, MFS, EOS - Conditional: SMEO] DSN switching systems shall meet the switch service requirements in Telcordia Technologies Generic Requirements, GR-478-CORE, Issue 4, February 2000, Section 3.5.

9.2.2.6 Special Studies

[Required: TS, MFS, EOS - Conditional: SMEO] DSN switching systems shall meet the special studies requirements in Telcordia Technologies Generic Requirements, GR-478-CORE, Issue 4, February 2000, Section 3.6. Requirements referring to ISDN are optional for SMEO switches.

9.2.2.7 Remote Switching Site

[Conditional: MFS, EOS, SMEO] DSN switching systems which support remote switching sites shall meet the remote switching site traffic and reference data requirements in Telcordia Technologies Generic Requirements, GR-478-CORE, Issue 4, February 2000, Section 3.7, paragraphs 3.7.1 and 3.7.2.

9.2.2.8 Features

[Conditional: MFS, EOS, SMEO] DSN switches shall meet the traffic data requirements for features. Descriptions of the requirements are found in Telcordia Technologies Generic Requirements, GR-478-CORE, Issue 4, February 2000, Section 3.10.

9.2.3 Common Channel Signaling Network (CCSN) Measurements

[Required: TS, EOS, MFS - Conditional: SMEO] DSN switching systems shall meet the CCSN measurement requirements in Telcordia Technologies Generic Requirements, GR-478-CORE, Issue 4, February 2000, Section 4.

9.2.4 ISDN Measurements

[Required: TS, MFS, EOS, SMEO] DSN switching systems providing ISDN services shall meet the ISDN measurement requirements in Telcordia Technologies Generic Requirements, GR-478-CORE, Issue 4, February 2000, Section 6.

9.2.5 Traffic Capacity

[Required: MFS, TS, EOS, SMEO] Requirements for Traffic Capacity shall be in accordance with Telcordia Technologies GR-517-CORE, Issue 1, December 1998, *Traffic Capacity and Environment*

9.3 Fault Management

[Required: TS, EOS, SMEO, MFS] DSN Telephone switching systems shall detect fault (alarm) conditions and generate alarm notifications. The alarm messages must be sent to the assigned NM Alarm channel in near-real time. No alarm restriction/filtering is necessary. In addition to the data formats in paragraph 9.1, alarms may be sent as Simple Network Management Network Protocol (SNMP) traps.

If this channel is also used to output switch administrative log information, the alarm messages must be distinguishable from an administrative log message.

9.4 Configuration Management (CM)

[Required: TS, MFS, EOS, SMEO] Requirements for this feature shall be in accordance with Telcordia Technologies GR-472-CORE, *Network Element Configuration Management*, Revision 2, Feb. 1999, Section 4.

9.5 Automated Message Accounting (AMA)

The Automated Message Accounting (AMA) process in a switching system provides usage related data to perform customer billing and call detail recording (CDR).

9.5.1 DSN CDR Fields

[Required: EOS, SMEO, MFS] The data fields for DSN Call Detail Recording shall be as shown in Table 9-1. These requirements fall into one of two categories:

1. "R" = REQUIRED: feature/function required and must adhere to the specific GSCR requirements
2. "NR" = NOT REQUIRED: feature/function not required.

Table 9-1. Call Detail Recording Data

MFS	EOS	SMEO	DESCRIPTION
R	R	R	The telephone switching system must be able to generate call accounting information, Call Detail Recording (CDR). The call accounting information must be able to be sent to the NM CDR channel when requested by the NM system
R	R	R	The CDRs can be provided in any format, but must, as a minimum, contain the data elements listed below.
R	R	R	1) Start Date of Call (In Julian or Calendar)
R	R	R	2) Start Time of Call (Hour + Minute + Second)
R	R	R	3) Either (or both) a) Elapsed Time of Call b) Stop Time of Call
R	R	R	4) Calling Number
R	R	R	5) Called Number (must include all dialed digits)
R	R	R	6) Precedence Level of Call (Note: this may be accomplished by either a specific precedence level designation field in the call record or by providing the dialed precedence level access digits in the called number field.)
R	R	R	7) Outgoing Trunk Group of the call
R	R	R	8) Outgoing Trunk Group member of the call
R	R	NR	9) Incoming Trunk Group of the call
R	R	NR	10) Incoming Trunk Group Member of the call
R	R	NR	11) Call Answered/Unanswered Indicator
R	R	NR	12) Conference Call Indicator
R	R	NR	13) Customer/Business Group Identification

9.5.2 CDR Data Retention

[Required: EOS, MFS – Conditional: SMEO] DSN switching systems shall have internal storage capacity to store a minimum of 5 days of Call Detail Recording (CDR) data.

9.6 Performance Management

[Required/Conditional: EOS, MFS, SMEO] Table 9-2 contains the minimum DSN switch performance data requirements. These requirements fall into one of three categories:

1. "R" – REQUIRED: feature/function required in a candidate switch. Must adhere to the specific GSCR requirements.

2. "R/NC" - REQUIRED – NOT CRITICAL – feature/function is required. However, the fact that a specific switch cannot provide a specific feature/function does not necessarily mean it can't obtain a waiver from DISA to operate in the DSN. E.G. if a particular switch cannot provide traffic measurements, DISA may elect to waive that requirement.

3. "O" - OPTIONAL: feature/function is optional. However, if the feature/function is provided, it must adhere to the specific GSCR requirements – if the GSCR is applicable.

Note: Where applicable, the requirements for the performance measurements shall be in accordance with Telcordia Technologies GR-478-CORE, *Measurements and Data Generation, Issue 4*, Feb. 2000, Section 3.3. Reference to the specific Telcordia Requirement [R], Objective [O], or Conditional Requirement [CR] are shown in the Requirements column of Table 9-2.

Table 9-2. Performance Management Data

REQUIREMENT	TS/ MFS	EO	SMEO	DESCRIPTION
	R	R	R	The telephone switching system shall be able to generate switch performance measurement data. The performance measurement data must sent to the assigned NM traffic channel. Ideally, the performance measurement data is polled by the NM system, but, with DISA approval, the performance measurement data may be periodically (automatically) sent to the NM system. Performance measurement reporting intervals are typically placed in two categories; those supporting the near real time network management function and those supporting the off-line network performance assessment function.

NM R2-19	R	R	R	Polling Increments The MFS and EO must be able to provide the required NM data in either 5 or 15 minute increments. Those data fields marked with "NM" in the Requirements column must be provided in either 5 or 15 minute intervals. The other data fields must be provided in accordance with the "R", "R/NC", "O" marking, but may be provided in 5, 15, 30, or 60 minute intervals. The SMEO must be able to provide the required NM data. The SMEO may provide this data in either 5 or 15 or 30 or 60-minute increments.
				As a minimum, the DSN switch must be able to produce the following performance measurements:
NM O3-237[233]	R	R	R	1) Trunk Group Number
NM O3-244[240]	R	R	O	2) Trunk Group Far End CLLI
NM O3-246[242]	R	R	R	3) Trunks Equipped
	R/NC	R/NC	O	4) Trunks In Service
NM R3-203[219]	R	R	R	5) Outgoing Attempts
NM R3-204[220]	R	R	R	6) Outgoing Overflows
NM R3-202[218]	R	R	R	7) Incoming Attempts
NM R3-205[221]	R	R	R	8) Trunk Group Usage (in seconds or CCS) a) Total Trunk Group Usage or b) Outgoing Trunk Group Usage & Incoming Trunk Group Usage
R3-206[222]	R	R	R/NC	9) Maintenance Usage (in seconds or CCS)
R3-25[57]	R	O	O	10) Tandem Call Count
R3-217[1331]	R	R	O	11) Glare

By Trunk Group. The number of times outgoing calls failed due to problems such as seizure failures, signaling problems, or other outgoing failures.	O	O	O	12) Outgoing Failures
By Trunk Group. The number of times an actual (or apparent) incoming call failed.	O	O	O	13) Incoming Failures
By Trunk Group. The number of times a call incoming from either a line or incoming trunk fails to find an internal switch path to an outgoing trunk group.	O	O	O	14) Out Match Fail
CR3-230[1344]	R/NC	R/NC	O	15) Trunk Group Preemption Failure
CR3-231[1345]	R/NC	R/NC	O	16) Incoming Calls Preempted
CR3-232[1346]	R/NC	R/NC	O	17) Outgoing Calls Preempted
CR3-233[1347]	R/NC	R/NC	O	18) Incoming Precedence Calls Preempted
CR3-234[1348]	R/NC	R/NC	O	19) Outgoing Precedence Calls Preempted

9.7 Network Management Controls

DSN switches shall provide protective, expansive, automatic and manual controls in the network switching elements.

9.7.1 Automatic Controls

[Required: TS, EOS, MFS – Conditional: SMEO] Automatic controls are network management controls that are automatically applied by the network switching elements (NSE) when they recognize a problem due to a shortage in call processing or call carrying resources. These automatic controls, which are programmed into the switching element and triggered by the changing switching system and trunk group congestion, keep the message network working efficiently during

periods of overload. Both the predetermined condition (threshold) and the required response (action to be taken automatically) are contained in the database of each NSE. These automatic controls shall consist of *Automatic Congestion Controls (ACC)*, *Trunk Reservation (TRE)*, and *Selective Incoming Load Controls (SILC).* There are two types of automatic controls: protective and expansive. Protective controls can be used to inhibit the spread of congestion in the network by restricting normal trunk group access and overflow (trunk group controls) or by limiting the attempts on selected destination or signaling codes (code controls). Expansive controls are used to expand routing beyond the normal in-chain routes when in-chain routes are busy or have failed and there exists idle capacity in out-of-chain routes.

9.7.1.1. Automatic Congestion Controls (ACC)

[Required: TS, EOS, MFS – Conditional: SMEO] ACC provides a congested switching system with the capability to use Signaling System 7 (SS7) to notify linked switches of its level of congestion. The linked switching systems can then reduce the traffic offered to the congested switch. Controls such as this can significantly increase the throughput of completed calls through a network during periods of overload. ACC detects and responds to two levels of switching congestion (i.e., CL1 and CL2). ACC has two components:

1. Detection and Transmission of congestion status
2. Reception and Response to congestion status.

Refer to GR-477-CORE, Section 4.3.1, for a detailed description of ACC.

9.7.1.2. Trunk Reservation (TRE)

[Required: TS, EOS, MFS – Conditional: SMEO] TRE is an automatic trunk group control that allows the network manager to reserve a number of trunks for a desired type of traffic. Two adjustable "reservation levels" (RL1 and RL2) are defined for this control and the number of trunks reserved can vary from 0 - 15. When the number of idle outgoing trunks is less than or equal to RL1, then a pre-selected control affects calls on the trunk group until the number of idle trunks exceeds RL1. This same scheme is used for RL2 but the control is generally more severe. In setting up trunk reservation on a trunk group, the network manager selects the following options:

- Reservation Levels (RL1 and RL2)
- Response Category (A through E)
- Control Action (skip or cancel)

Refer to GR-477-CORE, Section 4.3.2, for a detailed description of TRE.

9.7.1.3. Selective Incoming Load Controls (SILC)

[Required: TS, EOS, MFS – Conditional: SMEO] SILC is a control that, when activated on a trunk group, causes the incoming calls on that trunk group to be ignored by the receiving switch or sent to a disposition. SILC is intended as a substitute for ACC, therefore, would only be used by

switches that are not using SS7 signaling. This control allows a network manager to select trunk groups to be controlled in an office when the office itself (not one connected to it) encounters congestion levels 1 and 2. Activation is intended to occur at the same time that ACC signals are being transmitted from the office. The inhibiting of the transmission of ACC signals will also inhibit the activation of SILC. The percentages or gap rates for each congestion level are either generically defined or they can be modified via a recent change message in the network switching center. The network manager also has the option of putting up to 128 trunk groups on the SILC list for activation in congestion level.

Refer to GR-477-CORE, Section 5.3.4, for a detailed description of SILC.

9.7.1.4. Precedence Access Threshold (PAT)

[Conditional: MFS] The PAT control limits the number of simultaneous calls originated by selected user stations, attendant positions, and other designated switch terminations whose traffic input into the DSN requires screening. Each precedence access threshold will set an upper limit on the number of simultaneous calls that are allowed to enter the DSN by precedence level and calling area. There will be separate precedence access threshold settings established for each combination of precedence level and calling area. This control will allow five precedence levels (Routine, Priority, Immediate, Flash, and Flash Override) and five progressively wider calling areas (A1, A2, A3, A4, and A5). Additional requirements and a detailed description of PAT can be found in Section 2.11.1.

9.7.2 Overload Controls

9.7.2.1. Essential Service Protection (ESP)

[Required: TS, EOS, MFS – Conditional: SMEO] A DSN switch shall be capable of giving preference for originating service to a limited number of stations during emergencies. This feature is aimed at ensuring that a small number of lines designated as “essential” by the government receive priority originating service during periods of extreme overloads. Service to other lines should be equitably distributed when ESP is activated. The ESP feature is manually enabled and disabled. ESP is automatically activated, if previously enabled, when the system detects that service has been significantly degraded. The switch shall return to normal processing when the original condition returns to a normal condition. Each switch shall have the capability to classmark up to 15 percent of the station lines for this service.

Refer to GR-741-CORE, Section 3.5.4.2.D.2, for a description of ESP.

9.7.3 Manual Controls

[Required: TS, EOS, MFS – Conditional: SMEO] Manual network management controls are those controls that are implemented by the personnel at a Network Management Center (NMC). Manual controls supplement the automatic controls and are used to handle the network problems that require flexibility and human judgment. Often the network manager uses manual controls to

utilize less congested areas of the network to relieve the pressure in overloaded sections and fully utilize the capacity of the network. There are two types of manual controls: protective and expansive. Protective controls can be used to inhibit the spread of congestion in the network by restricting normal trunk group access and overflow (trunk group controls) or by limiting the attempts on selected destination or signaling codes (code controls). Expansive controls are used to expand routing beyond the normal in-chain routes when in-chain routes are busy or have failed and there exists idle capacity in out-of-chain routes. If the characteristics of the particular call meet the criteria for the type of traffic to be affected, it will be subjected to the control. For trunk group controls, pre selections are made from the route options listed below. The route options involve trunk groups, and since code controls affect a call before it is offered to a trunk group, route options are irrelevant to code controls. The following options listed below are traffic characteristic options that can be pre selected.

9.7.3.1 Trunk Group Controls

[Required: TS, EOS, MFS – Conditional: SMEO] DSN switching elements require both protective and expansive manual trunk group (TG) controls. The protective controls (CANF, CANT, and SKIP) are those that block traffic from using a trunk group, while expansive controls (RR) allow other ways for traffic to complete via identified trunk groups. ***The application of any TG control shall not prevent precedence calls from performing a preemptive search on all of the TG's that were previously friendly searched.*** The options on the protective controls include independent direct routed and alternate routed percentages (not by gap rates) and announcement selection (NCA, EA1, or EA2 for CANF, and CANT). The disposition of calls controlled by SKIP is to the next in-chain trunk group or to NCA if the controlled trunk group is a final group. The expansive trunk group control (i.e., Reroute [RR]) extends call routing to trunk groups beyond the normal call routing hierarchy in those cases where the original route has congestion or fails, and spare call capacity exists on the receiving trunk group.

9.7.3.1.1 Cancel From (CANF)

[Required: TS, EOS, MFS – Conditional: SMEO] CANF is a protective, post hunt trunk group (TG) control. The main function of this control is to cancel traffic overflowing from a TG to the next in control only if the characteristics of the call meet the options that have been preselected for CANF. FLASH and FLASH OVERRIDE calls shall be exempted from this control.

Refer to GR-477-CORE, R6-9, for a detailed description of CANF.

9.7.3.1.2 Cancel To (CANT)

[Required: TS, EOS, MFS – Conditional: SMEO] CANT is a protective, pre hunt trunk group (TG) control that cancels the affected traffic offered to a TG. A call is affected by this control only if the characteristics of the call meet the options that have been preselected by the network controller. FLASH and FLASH OVERRIDE calls shall be exempted from this control.

Refer to GR-477-CORE, R6-9, for a detailed description of CANT.

9.7.3.1.3 SKIP

[Required: TS, EOS, MFS – Conditional: SMEO] SKIP is a pre hunt TG control that causes the affected traffic to skip over the TG that the control is applied to and to attempt to find a trunk in the remaining route sequence. The next alternative routed TG does not necessarily have to be the next in chain TG in the route advance. It could be an out of chain TG that is substituted for the TG that was skipped. A call is affected by this control only if the characteristics of the call meet the options that have been preselected for the SKIP control.

Refer to GR-477-CORE, R6-9, for a detailed description of SKIP.

9.7.3.1.4 Reroute (RR)

[Required: TS, EOS, MFS – Conditional: SMEO] Reroute is a TG control that can either be an expansive pre hunt TG control or an expansive post hunt TG control. Normally, it is used as an expansive post hunt TG control. Use of the RR Control restricts offered calls from those routes known to be congested or failed, and provides substitute routes that have a higher probability of call completion. The requirements for RR Control are given in GR-477-CORE. When activating an RR Control, the Network Manager can choose between the single-via or multiple-via control types.

Refer to GR-477-CORE, O6-11.B, for a detailed description of RR.

9.7.3.1.4.1 Single-Via-Reroute

[Required: TS, EOS, MFS – Conditional: SMEO] A single-via or regular RR Control explanation must begin with an originating office designated "A", and a destination office designated "B", which are connected by a trunk group labeled "AB". In normal operation, calls that cannot be handled by trunk group AB are route-advanced to other trunk groups for completion in a predefined sequence known as a "Route Advance Chain."

Calls that cannot be handled by any of the chained trunk groups will be routed to a final treatment trunk group, which is usually an announcement. To implement an RR Control, there must be another NSE trunk group designated "via", which has the ability to route calls to destination B, but does not normally do so. *(Note:* Trunk group "via" is not required to have a direct link to office B, just the means to route calls to B.) Assuming that a RR Control is issued, if the call cannot be handled by trunk group AB, it is then offered to the via trunk group for completion. If the controlled call overflows the “A” to the "via" trunk group, it is offered to the next route in the normal chain. This is normally the first route advance if the call offered to trunk group AB is overflowed from AB and no controls are in effect. In other words, single-via-rerouting is the insertion of an out-of-chain route (trunk group) into the normal routing chain during the control period. There is no separate limit on the number of single-via RR Controls that may be active in an SPCS at any one time. However, all RR Controls are counted toward the maximum limit of 128 active Manual TG Controls.

9.7.3.1.4.2 Multiple-Via Reroute

[Required: TS, EOS, MFS – Conditional: SMEO] In cases where a single trunk group (called "via" in the above example) cannot handle all of the originating A to destination B traffic, up to seven trunk groups, each having means to route traffic to B, may be used. This capability is called "Multiple-via Reroute." An overflowed call from trunk group AB is offered in succession to all designated "via" trunk groups until it is handled. If none can carry the call, it is then offered to the next route in the normal chain. If the call is handled by a "via" trunk group, the next call to destination B is offered to the "via" trunk group following the one that handled the previous call. There is a separate limit of 16 multiple-via RR Controls, each having a maximum of seven via-routes per SPCS, all of which contribute to the limit of 128 Manual TG Controls. The term "ordered hunt" refers to traversing the multiple-via routing patterns described above. For each of the two control types, single-via or multiple-via, the following are additional options associated with the RR Control:

9.7.3.1.4.3 Overflow (ORR) vs. Immediate Reroute (IRR)

[Required: TS, EOS, MFS – Conditional: SMEO] The ORR option modifies the normal trunk group route advance hierarchy (in-chain) by inserting another trunk group (out-of-chain) into the call routing pattern. The IRR option provides for traffic to be rerouted before the calls are offered to a particular trunk group. If the IRR option is not specified in the "Reroute Control Request" the ORR option will be enabled by default. Any attempt to apply both ORR and IRR options to the same RR Control will have the effect of replacing the existing option (ORR/IRR) with the most recently specified option (ORR/IRR). That is, the option specified in the original command will be replaced by the option specified in the later command.

9.7.3.2 Code Controls

[Required: TS, EOS, MFS – Conditional: SMEO] Call gap code control is a manual protective control. The call gap control governs the maximum rate of attempts to a particular code, over a period of time, out of the office in which the control is implemented. This code control provides call gapping capabilities on destination codes of 3 to 10 digits. Options for these code controls include a selection of gap interval, a call disposition (EA1, EA2, NCA), and a switching domain. FLASH and FLASH OVERRIDE calls shall be exempted from this control.

9.7.3.2.1 Code Controls - Code Gapping Controls

[Required: TS, EOS, MFS – Conditional: SMEO] Manual Code Controls are Protective Controls that restrict calls having code prefixes for destinations that have been temporarily designated as difficult or impossible to complete.

The code prefixes may be Destination Codes (NPA, Service Access Code [SAC], etc.), 7-Digit Line Number, (KXX-XXXX), or a combination of them. Using this type of control allows available network resources to handle traffic to other destinations that has a better probability of completion. Code Controls are most effective for controlling "focused overloads," which are characterized by a surge of traffic from many locations within the network to a single office or destination code. This interface supports the "code-gapping" method of code control. A code-

gapping control is applied by specifying the code combination, i.e., NPA, NPA + KXX, etc., and the maximum rate at which calls are forwarded. Thus, the number of offered calls to a given destination is independent of the calling rate. For example, assume that calls to a particular area code (NPA) are to be restricted. The Network Manager has the ability to allow calls with the designated NPA prefix to be offered to a destination route at a rate ranging from 6 per minute to 12 per hour. The rate at which the calls are offered for completion is independent of the number of calls generated with the NPA prefix. This code-gapping technique provides a greater call completion precision than do other nonsupported methods such as "percentage blocking."

GR-477-CORE and GR-690-CORE contain the detailed requirements for Code Controls.

A maximum of 64 Code Controls may be active in the NSE at any one time. The Code

Control feature should allow the Network Manager to control calls all destination codes in his or connected networks

9.7.3.3 Total Office Manual Control Removal - Request/Response

[Required: TS, EOS, MFS – Conditional: SMEO] All total office controls are manual. All CANT, CANF, SKIP, or RR controls can be removed as a group on a total office basis. Code controls can also be removed on a total office basis. The capability to remove "ALL" manual controls in the entire office also exists. These commands will not remove the automatic control overrides. However, the ACC transmit/SILC override (inhibit) control can only be implemented or removed on a total office basis.

Refer to GR-747-CORE, Section 3.2.1.2 C. for a detailed description of this feature.

9.7.4 Treatment Options Of Calls That Are Terminated

[Required: TS, EOS, MFS – Conditional: SMEO] The following paragraphs describe how the termination of precedence level and ROUTINE calls will be handled based on the treatment they are given. The no circuits announcement (NCA), emergency announcement 1 (EA1), and emergency announcement 2 (EA2), are prerecorded announcement options that are selected by the network management controller. Since the control, Reroute (RR), is a control that allows the switch to search additional TG's outside of the in-chain sequence, RR would not cause a call to be terminated. However, the other controls mentioned in Section 11.4 would cause a call to be terminated because they either prevent calls from accessing or overflowing a TG or in the case of code controls such as Code Block, they prevent calls from reaching a specified code.

If a precedence level call would normally be given reorder treatment, it shall be deflected to a blocked precedence announcement (BPA). If a precedence level call would normally be given no circuit treatment, it shall be deflected to a BPA.

If a ROUTINE call is given reorder treatment, the call shall be given 120 impulses per minute (IPM). If a ROUTINE call is given no circuit treatment, it shall be given a No Circuit Announcement (NCA) if the prerecorded option is available. If the announcement is not available,

the defaulting treatment is for the call to be given a 120 IPM. If a ROUTINE call is given emergency treatment, it shall be given either an emergency announcement 1 (EA1) or an emergency announcement 2 (EA2).

9.8 Remote Access to Switch

[Required: TS, EOS, SMEO, MFS] The DSN switching system shall be able to receive remote commands. These switch commands must be received through the switch access channel. The user interface to input these commands may be at a switch command prompt or via a switch provided user interface (e.g. GUI, text screen). The DSN switching system shall be able to receive remote commands for configuring the network related entries within the switch.

SECTION 10 - Integrated Services Digital Network (ISDN) Generic Requirements

10.0 Introduction

ISDN is a digital network technology capable of providing a wide variety of user applications. National ISDN is the Telcordia Technologies recommended implementation of ISDN to provide customer access to multiple services over a set of uniform interfaces.

The first step of National ISDN-1 (NI-1)was the initial deployment of National ISDN in 1992 and addressed the Basic Rate Interface (BRI). The second step of National ISDN-2 (NI-2) which expanded the BRI interface requirements and added Primary Rate Interface (PRI) requirements was introduced in 1993. NI-3 introduced an additional set of services for addressing “mass market” and other market needs.

DSN ISDN generic requirementS are based on Telcordia Technologies National ISDN documentation summarized in Telcordia Technologies Special Report, SR-3476, Issue 1, *National ISDN 1995 and 1996,* June 1995. SR-3476 lists the features and functions NI-1 and NI-2 and is also a survey of three major switch manufacturers that shows that at least two of the three manufacturers, and most of the time all three, comply with NI-1 and NI-2.

10.1 DSN Generic ISDN Features and Interface Descriptions

DSN switching systems shall provide the ISDN BRI, PRI, and Packet Data capabilities shown in Tables 10-1 through 10-6. Tables 3-1 through 3-6 of Telcordia Technologies, *National ISDN 1995 and 1996,* SR-3476, Issue 1, June 1995, provide the specific requirements for features and capabilities listed in tables 10-1 through 10-6 of this GSCR. MLPP interactions with ISDN are identified in Section 3 of this GSCR.

Table 10-1. BRI Access, Call Control, and Signaling

TS	MFS	EOS	SMEO	PBX 1	PBX 2	DVX		Feature or Capability
	R	R	R	R	C	C		ISDN BRI Layer 1
	R	R	R	R	C	C		4:1 Time Division Multiplex Method for ISDN Basic Access
	R	R	R	R	C	C		ISDN BRI Layer 2
	R	R	R	R	C	C		BRI Circuit-Mode Call Control Basic Call Control
	R	R	R	R	C	C		BRI Terminal Initialization
	R	R	R	R	C	C		Service Profile Identifier
	R	R	R	R	C	C		Parameter Downloading
	R	R	R	R	C	C		Default Services for Terminals
	R	R	C	C	C	C		BRI Interworking with SS7
	R	R	R	R	C	C		ISDN BRI Packet User Originated, On-Demand B-Channel Packet Conditional Notification

Legend:

R = REQUIRED: feature/function required in a candidate switch. Must adhere to the specific GSCR requirements

C = CONDITIONAL: feature/function is optional. However, if the feature/function is provided, it must adhere to the specific GSCR requirements.

Table 10-2. Uniform Interface Configurations for BRIs

TS	MFS	EOS	SMEO	PBX 1	PBX 2	DVX		Feature or Capability
	R	R	R	R	C	C		Uniform Interface Configs. for BRI's Single User with Mult. Applications Two Users Sharing a BRI
	R	R	R	R	C	C		More than 2 B-Channel Terminals on a BRI (Passive Bus)
	R	R	R	R	C	C		Associated Group Indicator
	R	R	R	R	C	C		DN Sharing over Multiple Call Types on an Integrated Terminal
	R	R	R	R	C	C		Non-Initializing Terminals

Legend:

R = REQUIRED: feature/function required in a candidate switch. Must adhere to the specific GSCR requirements

C = CONDITIONAL: feature/function is optional. However, if the feature/function is provided, it must adhere to the specific GSCR requirements.

Table 10-3. BRI Features

TS	MFS	EOS	SMEO	PBX 1	PBX 2	DVX		Feature or Capability
	C	C	C	C	C	C		Electronic Key Telephone Systems
	C	C	C	C	C	C		Multiple DNs per Terminal
	C	C	C	C	C	C		Analog Member of an EKTS Group
	C	C	C	C	C	C		Multiple DN Appearances per Call Appearance Call Handling
	C	C	C	C	C	C		Hold/Retrieve
	C	C	C	C	C	C		Bridging/DN-Bridging
	C	C	C	C	C	C		Intercom Calling
	C	C	C	C	C	C		Membership in a Multiline Hunt Group
	C	C	C	C	C	C		Abbreviated and Delayed Ringing
	C	C	C	C	C	C		Automatic and/or Manual Bridged Call Exclusion
	C	C	C	C	C	C		Call Forwarding
	C	C	C	C	C	C		Call Forwarding Variable Courtesy Call Reminder Notification
	C	C	C	C	C	C		Call Forwarding Interface Busy
	C	C	C	C	C	C		Call Forwarding Don’t Answer
	C	C	C	C	C	C		Call Forwarding Intragroup Only
	C	C	C	C	C	C		Call Forwarding Interface Busy Incoming Only
	C	C	C	C	C	C		Call Forwarding Don’t Answer Incoming Only
	C	C	C	C	C	C		ISDN Call Hold Hold and Retrieve
	C	C	C	C	C	C		Flexible Calling
	C	C	C	C	C	C		Three-Way and Six-Way Calling
	C	C	C	C	C	C		Consultation Hold
	C	C	C	C	C	C		Conference Hold and Retrieve
	C	C	C	C	C	C		ISDN Display Service Protocol and Procedures Uniform Text (for NI-2 Uniform Services)
	C	C	C	C	C	C		Basic Business Group
	C	C	C	C	C	C		Denied Originating
	C	C	C	C	C	C		Denied Terminating
	C	C	C	C	C	C		Distinctive Alerting Indication
	C	C	C	C	C	C		Business Group Dial Access Features

TS	MFS	EOS	SMEO	PBX 1	PBX 2	DVX		Feature or Capability
	C	C	C	C	C	C		Dial Access to Automatic Flexible Routing
	C	C	C	C	C	C		Customer Access Treatment Code Restriction
	C	C	C	C	C	C		Code Restriction and Diversion
	C	C	C	C	C	C		Direct Outward Dialing
	C	C	C	C	C	C		Direct Inward Dialing
	C	C	C	C	C	C		ISDN Call Pickup
	C	C	C	C	C	C		ISDN Directed Call Pickup
	C	C	C	C	C	C		Access To Analog
	C	C	C	C	C	C		Attendant Access
	C	C	C	C	C	C		Station Message Detail Recording
	C	C	C	C	C	C		Tracing of Terminating Calls Tandem Call Tracing Trace of a Call In Progress Bulk Calling Line Identification Selective Call Acceptance Selective Call Forwarding Selective Call Rejection
	C	C	C	C	C	C	C	Limitations and Restrictions for 911 Calls Hold Not Allowed for a 911 Call Add a 911 Call to a Conference

Legend:

R = REQUIRED: feature/function required in a candidate switch. Must adhere to the specific GSCR requirements

C = CONDITIONAL: feature/function is optional. However, if the feature/function is provided, it must adhere to the specific GSCR requirements.

Table 10-4. PRI Access, Call Control, and Signaling

TS	MFS	EOS	SMEO	PBX 1	PBX 2	DVX		Feature or Capability
R	R	R	R	R	C	C		PRI Layer 1
R	R	R	R	R	C	C		PRI Layer 2 (Circuit)
R	R	R	R	R	C	C		PRI Call Control and Signaling
R	R	R	R	R	C	C		Basic Call Control for Circuit Mode Calls
R	R	R	R	R	C	C		Multiple DS1 Facilities Controlled by a Single D-Channel
R	R	R	R	R	C	C		Access to Selected Primary Rate Services on a Per-Call Basis
R	R	R	C	C	C	C		PRI Interworking with SS7
R	R	R	R	R	C	C		PRI Packet-Mode Call Control

Legend:

R = REQUIRED: feature/function required in a candidate switch. Must adhere to the specific GSCR requirements

C = CONDITIONAL: feature/function is optional. However, if the feature/function is provided, it must adhere to the specific GSCR requirements.

Table 10-5. PRI Features

TS	MFS	EOS	SMEO	PBX 1	PBX 2	DVX		Feature or Capability
R	R	R	R	R	C	C		Call-by-Call Service Selection FX Non-ISDN Tie INWATS OUTWATS Non-ISDN ETN
R	R	R	R	R	C	C		Interworking with Private Networks

Legend:

R = REQUIRED: feature/function required in a candidate switch. Must adhere to the specific GSCR requirements

C = CONDITIONAL: feature/function is optional. However, if the feature/function is provided, it must adhere to the specific GSCR requirements.

Table 10-6. Packet Data Features and Capabilities

TS	MFS	EOS	SMEO	PBX1	PBX2	DVX		Feature or Capability
C	C	C	C	C	C	C		PPSN Call Control and Features - X.25 Features
C	C	C	C	C	C	C		Closed User Groups (CUG),CUG Outgoing Access, CUG Incoming Access
C	C	C	C	C	C	C		Recognized Private Operating Administration (RPOA)
C	C	C	C	C	C	C		CCITT DTE Facilities
C	C	C	C	C	C	C		PPSN Call Control and Features X.75 and X.75' Utility Support
C	C	C	C	C	C	C		All X.75 Utilities in Minimal Subset
C	C	C	C	C	C	C		Multilink Procedures on X.75/X.75'
C	C	C	C	C	C	C		Support of X.75 End Office Connections
C	C	C	C	C	C	C		Selective Support of X.75' Utilities X.75 Utilities on X.75' Access Characteristics X.75 Interface Identifier Clearing Subnetwork Identification Transit Sub-network Count
C	C	C	C	C	C	C		Packet Numbering and Routing
C	C	C	C	C	C	C		Packet Mode Data Routing & Digit Analysis Requirements
C	C	C	C	C	C	C		Numbering Plan Interworking per TR-448 and TR-301.
C	C	C	C	C	C	C		User-to-User with Call Control (Packet)
C	C	C	C	C	C	C		Fast Select, Fast Select Acceptance
C	C	C	C	C	C	C		16 Octets of data in call request
C	C	C	C	C	C	C		ISDN X.25 Supplementary Services
C	C	C	C	C	C	C		One-Way Logical Channel Outgoing/Incoming
C	C	C	C	C	C	C		Incoming/Outgoing Calls Barred
C	C	C	C	C	C	C		Default Throughput Class Alignment
C	C	C	C	C	C	C		Nonstandard Default Packet Sizes
C	C	C	C	C	C	C		Nonstandard Default Window Sizes
C	C	C	C	C	C	C		Flow Control Parameter Negotiation
C	C	C	C	C	C	C		Throughput Class Negotiation
C	C	C	C	C	C	C		Transit Delay
C	C	C	C	C	C	C		User Testing
C	C	C	C	C	C	C		Multiline Hunt Group

TS	MFS	EOS	SMEO	PBX1	PBX2	DVX		Feature or Capability
C	C	C	C	C	C	C		Linear and/or Circular Hunting
C	C	C	C	C	C	C		Assignment of Non-Hunt DN to Hunt Terminals
C	C	C	C	C	C	C		ISDN Calling Number Identification Services
C	C	C	C	C	C	C		Inband Calling Number ID for Packet
C	C	C	C	C	C	C		Basic Business Group Inclusion of Packet In BBG Inclusion of Packet in Business Group Dialing Plan

Legend:

R = REQUIRED: feature/function required in a candidate switch. Must adhere to the specific GSCR requirements

C = CONDITIONAL: feature/function is optional. However, if the feature/function is provided, it must adhere to the specific GSCR requirements.

SECTION 11 – Synchronization

11.0 Introduction

The use of digital switching systems directly interconnected with digital transmission facilities as an integral part of the DSN requires the use of techniques for synchronizing clock rates. The term synchronization refers to an arrangement for operating digital switching systems at a common (or uniform) clock rate whereby the data signal is accompanied by a phase-related clock. Improperly synchronized clock rates result in the loss of portions of the bit streams and a concomitant loss of information. The DISN Timing and Synchronization (T&S) subsystem utilizes Navigation Satellite Timing and Ranging (NAVSTAR) Global Positioning System (GPS) transmissions from which a precise frequency is derived. This precise frequency timing signal is phase related (referenced) to Universal Time, Coordinated (UTC). The T&S subsystem frequency multiplier accepts precise frequency signals from primary source or, in case of failure, switches to an alternate source provided by atomic clocks, e.g., cesium beam or rubidium, if available. The Clock Distribution System disseminates timing through the equipment hierarchy. DSN switches may also receive system timing via digital transmission facilities to locations having direct access to (synchronized to) the timing sources already described. This chapter provides the requirements for network synchronization within the DSN.

11.1 Timing Modes

[REQUIRED: TS, EOS, SMEO, MFS] DSN switching systems shall meet the timing mode requirements specified in the Telcordia, GR-518-CORE, Issue 1, May 1994, paragraph 18.1. Most SMEOs will only support line timing. This should not be required for SMEOs or PBX1.

11.1.1 External Timing Mode

11.1.1.1 External Timing Mode

[REQUIRED: TS, EOS, MFS – CONDITIONAL: SMEO] The switch shall support external timing modes as defined in Telcordia TR-NW-001244 Clocks *for the Synchronized Network: Common Generic Criteria, Issue 1 (June 1993).*

11.1.1.2 Line Timing Mode

[REQUIRED: TS, EOS, SMEO, MFS, PBX1] The switch shall support line timing modes as defined in Telcordia TR-NW-001244 Clocks *for the Synchronized Network: Common Generic Criteria, Issue 1 (June 1993).*

11.1.2 Internal Clock Requirements

11.1.2.1 General

[REQUIRED: TS, EOS, MFS – CONDITIONAL: SMEO] The switch shall provide internal clock requirements as described in the Telcordia, GR-518-CORE, Issue 1, May 1994, paragraph 18.2.

11.1.2.2 Stratum 4 Clock

[REQUIRED: SMEO, PBX1, PBX2] The switch shall provide a stratum 4 or better internal clock.

11.2 Synchronization Performance Monitoring Criteria

[REQUIRED: TS, EOS, MFS – CONDITIONAL: SMEO, PBX1, PBX2]. The switch shall meet the synchronization performance monitoring criteria as described in the Telcordia, GR-518-CORE, Issue 1, May 1994, paragraph 18.3.

11.3 DS1 Traffic Interfaces

[REQUIRED: TS, EOS, MFS - CONDITIONAL: SMEO, PBX1, PBX2]. The switch shall meet the DS1 Traffic Interfaces as described in the Telcordia, GR-518-CORE, Issue 1, May 1994, paragraph 18.4.

11.4 DS0 Traffic Interconnects

[REQUIRED: TS, EOS, MFS - CONDITIONAL: SMEO, PBX1, PBX2]. The switch shall meet the DS0 Traffic Interconnects as described in the Telcordia, GR-518-CORE, Issue 1, May 1994, paragraph 18.5

SECTION 12 – Reliability

12.1 [Required: TS, EOS, MFS, SMEO] The DSN shall meet the reliability requirements in GR-512-CORE, Section 12, Issue 2, January 1998.

12.2 [Required: PBX1] The DSN shall meet a system availability of 0.99997. Detailed requirements are listed below. The explanation and format for these requirements are contained in GR-512-CORE, Section 12, Issue 2, January 1998, Sections 1 through 5. However, the values of the below requirements have been changed from the GR to reflect a judged reduced reliability requirement for a PBX. Also, those Termination and Capability Types specified in the GR, but not applicable to the DSN have been deleted:

12.2.1 The supplier shall provide a reliability model for the system showing all calculations and stating all assumptions.

12.2.2 The system shall be able to correctly detect, reconfigure, isolate, diagnose, and report the location of virtually all single hardware failures.

12.2.3 Predicted Individual Termination Downtimes shall not exceed the values in the following table:

Termination Type	**Requirement**
Analog Line	120 minutes/year
Analog Trunk	120 minutes/year
Digital Trunk	80 minutes/year
Accumulated B-Channel Circuit (BRA and PRA)	80 minutes/year

12.2.4 Predicted Multitermination Downtimes shall not exceed values in the following table:

Termination Type	**Requirement**
Analog Trunk	10 minutes/year
Digital Trunk	10 minutes/year
Analog Line	10 minutes/year
ISDN Circuit Switching	10 minutes/year

12.2.5 Predicted Total Capability Downtimes shall not exceed the values in the following table:

Capability Type	**Requirement**
Analog Line	3 minutes/year
ISDN Circuit Switching	3 minutes/year

12.2.6 Predicted Hardware Cutoff Call Rates shall not exceed the values in the following table:

Termination Type	**Requirement**
Analog Line	100,000 cutoffs per 10^9 hours of call duration
Analog Trunk	100,000 cutoffs per 10^9 hours of call duration
Digital Trunk	67,000 cutoffs per 10^9 hours of call duration
Accumulated B-Channel Circuit Mode	67,000 cutoffs per 10^9 hours of call duration

12.2.7 Predicted Operations System Interface Downtime shall not exceed 120 minutes/year.

12.2.8 Predicted Capability Downtimes shall not exceed the values in the following table:

Capability Type	**Requirement**
Control	3 minutes/year
Visibility or Diagnostic Capability	3 minutes/year

SECTION 13 – Security

[REQUIRED: TS, EOS, MFS, SMEO, PBX1]

The DSN shall meet security requirements in GR-815-CORE, Issue 1, November 1997 and conform to the requirements outlined in *DODI 5200.40, 30 December 1997, "Defense Information Technology Security Certification and Accreditation Process (DITSCAP)* and the DSN Security Technical Implementation Guide (available on https://iase.disa.mil web site).

Acronyms

AAR - Automatic Alternate Routing
ABBT -Automatic Board-to-Board Testing
ACA - Automatic Circuit Assurance
ACC - Automatic Congestion Control
ACG - Automatic Call Gap
ACMOS - Automatic Customer Measurement Outputting System
ACR - Anonymous Call Rejection
ADIMSS – Advanced DSN Integrated Management Support System
ADSI - Analog Display Services Interface
AFR - Automatic Flexible Routing
AIOD - Automatic Identified Outward Dialing
ALIT - Automatic Line Insulation Test
AMA -Automatic Message Accounting
ANI - Automatic Number Identification
AR - Automatic Recall
ARS - Automatic Route Selection
AT - Access Tandem
BBG - Basic Business Group
BCC - Bellcore Client Company
BCLID - Bulk Calling Line Identification
BGAC - Business Group Automatic Callback
BGCW - Business Group Call Waiting
BGL - Business Group Line
CAMA - Centralized Automatic Message Accounting
CAP - Competitive Access Provider
CAROT - Centralized Automatic Reporting On Trunks
CAS – Channel Associated Switching
CAT - Customer Access Treatment
CCS - Common Channel Signaling 2
CCSA - Common Control Switching Arrangement
CDAR - Customer- Dialed Account Recording
CDR – Call Detail Recording
CF - Call Forwarding

CFBL - Call Forwarding Busy Line
CFDA - Call Forwarding - Don't Answer
CFV - Call Forwarding Variable
CGA - Carrier Group Alarm
CGAP - Call Gapping
CID - Calling Identity Delivery
CIDCW - Calling Identity on Call Waiting
CIDS - Calling Identity Delivery and Suppression
CMC - Cellular Mobile Carrier
CNAB - Calling Name Delivery Blocking
CNAM - Calling Name Delivery
CND - Calling Number Delivery
CNDB - Calling Number Delivery Blocking
CO - Central Office
CONUS - Continental United States
COPWAT - Customer-Owned Premises Wiring Acceptance Test
COT - Customer Originated Trace
CPE - Customer Premises Equipment
CPS - Customer Premises System
CPSG - Call Park Subscriber Group
CPTE - Customer Premises Terminal Equipment
CS - Call Screening
CSR - Customer Station Rearrangement
CW - Call Waiting
CWD - Call Waiting Deluxe
CWI - Call Waiting Indication
CWT - Call Waiting Terminating
DA - Directory Assistance
DDD - Direct Distance Dialing
DID - Direct Inward Dialing
DITSCAP – Defense Information Technology Security Certification and Accreditation Process
DGVSR – DSN Generic Voice Over Internet Protocol Switching Requirements
DLC - Digital Loop Carrier
DN - Directory Number
DOC - Dynamic Overload Control
DOD - Direct Outward Dialing

DoD – Department of Defense
DP - Dial Pulse
DRCW - Distinctive Ringing/Call Waiting
DRE - Directional Reservation Equipment
DS0 - Digital Signal level 0
DS1 - Digital Signal level 1
DSN – Defense Switched Network
DTMF - Dual-Tone Multifrequency
DVX – Deployable Voice Exchange
EADAS - Engineering and Administration Data Acquisition System
EAEO - Equal Access End Office
EAOSS - Exchange Access Operator Services System
EIS - Expanded Inband Signaling
EKTS - Electronic Key Telephone System
EMSS – Enhanced Mobile Satellite Systems
EOS - End Office Switch
EPSCS - Enhanced Private Switched Communication Service
ESP - Essential Service Protection
ETN - Electronic Tandem Network
ETS - Electronic Tandem Switching
FC - Facility Code
FCC - Federal Communications Commission
FD - Feature Definition
FEMF - Foreign Electromotive Force
FGA - Feature Group A
FGB - Feature Group B 4
FGC - Feature Group C
FGD - Feature Group D
FGE - Feature Group E
FGF - Feature Group F
FNPA - Foreign Numbering Plan Area
FR - Family of Requirements
FRL - Facility Restriction Level
FSD - Feature Specific Document
FTS – Federal Telecommunications Systems
FX - Foreign Exchange

GR - Generic Requirements
HNPA - Home Numbering Plan Area
HTR - Hard-To-Reach
IC - InterLATA Carrier or Interexchange Carrier
IDDD - International Direct Distance Dialing
IDLC - Integrated Digital Loop Carrier
IMASS - Integrated Multiple Access Switched Service
INC - International Carrier
INWATS - Inward Wide Area Telecommunications Service
IVSN - Initial Voice Switched Network
I/O - Input/Output
ISDN - Integrated Services Digital Network
LAMA - Local Automatic Message Accounting
LATA - Local Access and Transport Area
LDN - Local Directory Number
LDS - Local Digital Switch
LED - Light Emitting Diode
LSSGR - LATA Switching Systems Generic Requirements
LUTS - Locked-Up Trunk Scan
MCC - Maintenance Control Center
MDII - Machine-Detected Interoffice Irregularities
MDR - Message Detail Recording
MF - Multifrequency
MFS – Multifunction Switch
MIS - Management Information System
MLHG - Multiline Hunt Group
MLT - Mechanized Loop Test
MSR - Message Storage and Retrieval System
MTS - Message Telephone Service
MU - Message Unit
MUF – Military Unique Feature
MVP - Multiline Variety Package
NAC - Network Administration Center
NANP - North American Numbering Plan
NDC - Network Data Collection
NI - Network Interface

NMC - Network Management Center
NORAD – North American Air Defense
NPA - Numbering Plan Area
NSEP - National Security Emergency Preparedness
NTM - Network Traffic Management
NUTS - Non-Usage Trunk Scan
OCS - Outgoing Call Screening
OIM - Operations Interface Module
ONI - Operator Number Identification
OS - Operations System
OTGR - Operations Technology Generic Requirements
OUTWATS - Outward Wide Area Telecommunications Service
P/AR - Peak-To-Average Ratio
PABX -Private Automatic Branch Exchange
PAT – Precedence Access Threshold
PBX - Private Branch Exchange
PCM - Pulse Code Modulation
PDMA - Provisioning-Driven Memory Administration
PFAC - Private Facility Access 6
PGS - Pair Gain System
PIC - Primary InterLATA Carrier
PIN - Personal Identification Number
PLAM - Public Line Activity Monitoring
POP - Point Of Presence
POTS - Plain Old Telephone Service
PPS - Pulses Per Second
PRE - Protectional Reservation Equipment
PSDS - Public Switched Digital Service
PTS - Public Telecommunications Service
PTT - Public Telephone and Telegraph
PVN - Private Virtual Network
RAO - Revenue Accounting Office
RC - Ring Control
RCF - Remote Call Forwarding
RCMAC - Recent Change Memory Administration Center
RDT - Remote Digital Terminal

RMAS - Remote Memory Administration System
ROP - Receive Only Printer
ROTL - Remote Office Test Line
RSB - Repair Service Bureau
RSU - Remote Switching Unit
RTP - Release To Pivot
SC/A - Signal Converter/Allotter
SCCS - Switching Control Center System
SCF - Selective Call Forwarding
SCOF - Selective Control of Facilities
SCP - Service Control Point
SCR - Selective Call Rejection
SES - Service Evaluation System
SFG - Simulated Facilities Group
SIT - Special Information Tone
SLU - Subscriber Line Usage
SMDF - Subscriber Main Distributing Frame
SMDI - Simplified Message Desk Interface
SMDR - Station Message Detail Recording
SMEO – Small End Office Switch
SOC - Service Observing Circuit
SPCS - Stored Program Control System
SS7 - Signaling System 7
SSP - Service Switching Point
STEP – Standard Tactical Entry Point
TCM - Traveling Class Mark
TLWS - Trunk and Line Work Station
TOS - Trunk Out of Service
TR - Technical Reference
TRD - Timed Release Disconnect
TS - Tandem Switch
TSP - Tandem Switching Provider
TTY - Teletypewriter
TWC - Three-Way Calling
UN - Uniform Numbering
USTWC - Usage-Sensitive Three-Way Calling

VDT - Video Display Terminal
VF - Voice Frequency
VMWI - Visual Message Waiting Indicator
VSC - Vertical Service Code
WATS - Wide Area Telecommunications Service
WWNDP – World Wide Numbering and Dialing Plan

Reference List

ANSI T1.619-1992, ISDN MLPP Service Capability

ANSI T1.619a-1994, ISDN MLPP Service Capability (Supplement to ANSI T1.619-1992)

ANSI T1.110-1999, Signaling System No. 7, General Information

ANSI T1.111-1996, Signaling System No. 7, Message Transfer Part

ANSI T1.112-1996, Signaling System No. 7, SCCP Functional Description

ANSI T1.113-1995, Signaling System No. 7, ISDN User Part

ANSI T1.114-2000, Signaling System No. 7 (SS7) - TCAP

ANSI T1.116-1996, Signaling System No. 7 (SS7) Operations, Maintenance, and Administrative Part (OMAP) (Revision and Consolidation of ANSI)

ANSI T1.116a-1998, *Supplemental ANSI*

ANSI T1.607-1998, ISDN Layer 3 Signaling Specifications for Circuit Switched Bearer Service for Digital Subscriber Signaling System No.1 (DSS1)

ANSI T1.613-1992, ISDN Call Waiting Supplementary Service

ANSI T1.616-1992, ISDN Call Hold Supplementary Service.

ANSI T1.621-1992, ISDN User-to-User Signaling Supplementary Service

ANSI T1.632-1993, ISDN Normal Call Transfer Supplementary Service

ANSI T1.642-1993, ISDN Call Deflection Supplementary Service

ANSI T1.643-1995, ISDN Explicit Call Transfer Supplementary Service

ANSI T1.647-1995, ISDN Conference Calling Supplementary Service

Telcordia Technologies GR-205-CORE, *Generic Requirements for ISDN Electronic Key Telephone Systems*, Issue 1, February 1996

Telcordia Technologies GR-217-CORE, *CLASS^{SM} Feature: Selective Call Forwarding*, Issue 1, June 2000

Telcordia Technologies GR-218-CORE, *CLASS^{SM} Feature: Selective Call Rejection*, Issue 1, June 2000

Telcordia Technologies GR-303-CORE, *System Generic Requirements, Objectives, and Interface*, Issue 4, December 2000.

Telcordia Technologies GR-317-CORE, *Switching System Generic Requirements for Call Control Using the Integrated Services Digital Network User Part*, November 2000

Telcordia Technologies GR-472-CORE, *Network Element Configuration Management*, Revision 2, Feb. 1999

Telcordia Technologies GR-477-CORE, *Network Traffic Management*, Issue 4, Feb. 2000

Telcordia Technologies GR-478-CORE, *Measurements and Data Generation*, Issue 4, Feb. 2000

Telcordia Technologies GR-505-CORE, *Call Processing*, Issue 1, Dec. 1997

Telcordia Technologies GR-506-CORE, *Signaling for Analog Interfaces*, Issue 1, Revision 1, Nov. 1996

Telcordia Technologies GR-510-CORE, *System Interfaces*, Issue 1, June 2000

Telcordia Technologies GR-512-CORE, *Reliability,* Issue 2, June 1998

Telcordia Technologies GR-517-CORE, *Traffic Capacity and Environment,* Issue 1, December 1998

Telcordia Technologies GR-518-CORE, *Synchronization Section 18,* Issue 1, May 1994

Telcordia Technologies GR-520-CORE, *Features Common to Residence and Business,* Issue 1, June 2000

Telcordia Technologies GR-524-CORE, *PBX Line,* Issue 1, June 2000

Telcordia Technologies GR-529-CORE, *Public Safety,* Issue 1, June 2000

Telcordia Technologies GR-532-CORE, *Call Processing Features,* Issue 1, June 2000

Telcordia Technologies GR-533-CORE, *Database Services Service Switching Points,* Issue 1, June 2000

Telcordia Technologies GR-540-CORE, *Tandem Supplement,* Issue 2, March 1999

Telcordia Technologies GR-562-CORE, *Manual Line Features,* Issue 1, June 2000

Telcordia Technologies GR-569-CORE, *Multiline Hunt Service,* Issue 1, June 2000

Telcordia Technologies GR-571-CORE, *Call Waiting,* Issue 1, June 2000

Telcordia Technologies GR-572-CORE, *Cancel Call Waiting,* Issue 1, June 2000

Telcordia Technologies GR-577-CORE, *Three-way Calling,* Issue 1, June 2000

Telcordia Technologies GR-579-CORE, *Add-on Transfer and Conference Calling Features,* Issue 1, June 2000

Telcordia Technologies GR-580-CORE, *Call Forwarding Variable,* Issue 1, June 2000

Telcordia Technologies GR-586-CORE, *Call Forwarding Subfeatures,* Issue 1, June 2000

Telcordia Technologies GR-590-CORE, *Call Pick-up Features,* Issue 1, June 2000

Telcordia Technologies GR-606-CORE, *Common Channel Signaling Section 6.5,* December 2000

Telcordia Technologies GR-621-CORE, *Traffic Data Provision Features,* Issue 1, June 2000

Telcordia Technologies GR-690-CORE, *Exchange Access Interconnection,* Issue 2, November 1996

Telcordia Technologies GR-741-CORE, *Network Administration Center (NAC) Input/Output Channel*, Issue 1, June 2000

Telcordia Technologies GR-747-CORE, *An Alternative Implementation of an SPCS to NTM OS Interface via an NDC OS,* Issue 1, June 2000

Telcordia Technologies Special Report, SR-3476, Issue 1, *National ISDN 1995 and 1996,* June 1995

Telcordia Technologies Special Report, SR-2275, Issue 4, *Telcordia Notes on the Networks,* October 2000

DISA Circular DISAC 310-255-1

ITU-T I.320, *ISDN Protocol Reference Model*, Nov. 93

ITU-T I.430, *Basic User-Network Interface-Layer 1 Specification*, Nov. 95

ITU-T I.431, *Primary Rate User-Network Interface-Layer 1 Specification*, June 97

ITU-T Q.920, *ISDN User-Network Interface Data Link Layer – General Aspects*, March 93, and Amendment 1, June 2000

ITU-T Q.921, *ISDN User-Network Interface – Data Link Layer Specification,* Sep 93, and Amendment 1, June 2000

ITU-T Q.931, *ISDN User-Network Interface Layer 3 Specification for Basic Call Control,* May 98

ITU-T *Q.932, Digital Subscriber signaling System No.1 Generic Procedures For The Control of ISDN Supplementary Services,* May 98, and Amendment 1, Jun 2000

ITU-T Q.955, *Community of Interest Supplementary Services using DSS-1*

ITU-T G.703, *Physical/Electrical Characteristics of Hierarchical Digital Interfaces,* Oct 98

ITU-T G.726, *40, 32, 24, 17 kbit/s Adaptive Differential Pulse Code Mode Modulation (ADPCM),* Dec 90

ITU-T G.732, *Characteristics of Primary PCM Multiplex Equipment Operating at 2048 kbit/s,* Nov 88

ITU-T G.772, *Protected Monitoring Points Provided on Digital Transmission Systems,* Mar 93

ITU-T G.704, *Synchronous Frame Structures used at 1544, 6312, 2048, 8448, and 44736 kbit/s Hierarchical Levels,* Oct 98

ITU-T G.711, *Pulse Code Modulation (PCM) of Voice Frequencies,* Nov 88

MIL-STD-187-700

MIL-STD-188-194, *Integrated Services Digital Network Profile,* 1992

Defense Switched Network (DSN) Worldwide Routing and Numbering Plan (WRNP)

Appendix 1 – Requirements Matrix

The following matrix summarizes the requirements by switch type for each feature/function described in this GSCR. A blank space indicates that this feature/function is not applicable to a particular switch. In the event that a disparity is found, the specific paragraphs in the GSCR shall take precedence over this matrix. This matrix should be used in conjunction with the GSCR and not as a stand-alone document.

PARAGRAPH	SUBJECT						
		TS	MFS	EOS	SMEO	PBX1	PBX2
	SECTION 2 - Capabilities and Features						
2.1.1	Individual Line		R	R	R	R	R
2.1.2	CLASS Feature: Selective Call Rejection		C	C			
2.1.3	Denied Originating Service		C	C	C	C	
2.1.4	Code Restriction and Diversion		R	R	R	C	
2.1.5.1	Call Waiting (CW)		C	C	C	C	
2.1.5.2	Cancel Call Waiting		C	C	C	C	
2.1.6	Three-Way Calling (TWC)		C	C	C	C	
2.1.7	Add-On Transfer and Conference Calling Features		C	C	C	C	
2.1.7.1	Call Transfer Individual - All Calls		C	C	C	C	
2.1.7.2	Call Transfer - Internal Only		C	C	C	C	
2.1.7.3	Call Transfer - Individual - Incoming Only/Add-on Consultation Hold – Incoming Only		C	C	C	C	
2.1.7.4	Call Transfer – Outside		C	C	C	C	
2.1.7.5	Call Transfer-Add-on to Fully Restricted Station		C	C	C	C	
2.1.7.6	Call Transfer Attendant		C	C	C	C	
2.1.7.7	Call Hold		C	C	C	C	
2.1.7.8	Conference Calling - Six Way Station Controlled		C	C	C	C	
2.1.8.1	Call Forwarding Variable		C	C	C	C	
2.1.8.2	Call Forwarding Busy Line (CFBL)		C	C	C	C	
2.1.8.3	Call Forwarding Don’t Answer All Calls		C	C	C	C	
2.1.8.4	CLASS Feature: Selective Call Forwarding		C	C	C	C	
2.1.9.1	Call Pick-Up		C	C	C	C	
2.1.9.2	Directed Call Pick-Up		C	C	C	C	

PARAGRAPH	SUBJECT						
		TS	MFS	EOS	SMEO	PBX1	PBX2
2.1.9.3	Directed Call Pick-Up without Barge-In		C	C	C	C	
2.2.1	Precedence and Preemption		R	R	C	C	
2.2.2	Call Display		R	R	C	C	
2.2.3	Class of Service Override		R	R	C	C	
2.2.4	Busy Override and Busy Verification		R	R	C	C	
2.2.5	Night Service		R	R	C	C	
2.2.6	Automatic Recall of Attendant		R	R	C	C	
2.2.7	Calls in Queue to the Attendant		R	R	C	C	
2.3.1	PBX Line		R	R	C	C	
2.3.2	Direct Inward Dialing (DID)		R	R	C	C	
2.3.3	National ISDN 1/2 Basic Access		R	R	R	R	C
2.3.4	National ISDN 1/2 Primary Access.	R	R	R	R	C	C
2.3.5	Analog Line		R	R	R	R	C
2.4.1	Basic Emergency Service (911)		C	C	C	C	C
2.4.2	Tracing of Terminating Calls.		R	R	R	C	
2.4.3	Outgoing Call Tracing.		R	R	R	C	
2.4.4	Tandem Call Trace.	R	R	R	R		
2.4.5	Trace of A Call in Progress.	R	R	R	R		
2.5.1.1	100-Type Test Line	R	R	R	C		
2.5.1.2	101-Type Test Line	R	R	R	C		
2.5.1.3	102-Type Test Line	R	R	R	C		
2.5.1.4	105-Type Test Line	R	R	R	C		
2.5.1.5	Synchronous Test Line	R	R	R	C		
2.5.1.6	Non-synchronous Test Line	R	R	R	C		
2.5.1.7	Permanent Busy Test Line	R	R	R	C		
2.5.1.8	108-Type Test Line	R	R	R	C		
2.5.2.1	Dialable Cable Pair Locator Tone		C	C	C		
2.5.2.2	DTMF Station Test Circuit		R	R	C		

PARAGRAPH	SUBJECT						
		TS	MFS	EOS	SMEO	PBX1	PBX2
2.5.3	Test Incoming Trunks in Tandem or Local State	C	C	C	C		
2.5.4.1	Manual Test of Line		R	R	C	C	
2.5.4.2	Manual Test of Trunks	R	R	R	R		
2.5.5	Trunk Group - Remove from Service (Make Busy)	R	R	R	R	C	
2.5.6	Trunk Group - Restore to Service (Make Idle)	R	R	R	R	C	
2.5.7	Carrier Group Alarm (CGA)	R	R	R	R		
2.5.7.1	Software Carrier Group Alarm	C	C	C	C		
2.6	Preset Conferencing	R	R	R	C	C	
2.6.1	Conference Notification Recorded Announcement	R	R	R	C	C	
2.6.2	Automatic Retrial and Alternate Address	R	R	R	C	C	
2.6.3	Bridge Release	R	R	R	C	C	
2.6.4	Secondary Conferencing	R	R	R	C	C	
2.7	Address Translation	R	R	R	C	C	
2.8	Nailed-Up Connections	R	R	R	C	C	
2.9	Assured Dial Tone	R	R	R	R	C	
2.11	Control Of Precedence Calls		C				
2.11.1	Precedence Access Threshold (PAT)		C				
2.11.1.1	Call Screening		C				
2.11.1.2	Functional Structure		C				
2.11.1.3	Simultaneous Calls Limitation		C				
2.11.1.4	Overflow Process		C				
2.11.1.5	Decrementing the Calls-In-Progress Count		C				
2.11.1.6	Call Treatment		C				
2.11.1.7	Queuing		C				
2.11.1.8	Attendant Calls		C				

PARAGRAPH	SUBJECT						
		TS	MFS	EOS	SMEO	PBX1	PBX2
2.11.1.9	Operational Measurement Registers		C				
2.11.1.10	Maintenance and Administration of Thresholds		C				
2.12	DSN ISDN Hotline Service		R	R	R		
2.12.1	Protected Hotline Calling		R	R	R		
2.12.2	Pair Protected Hotline Calling		R	R	R		
2.12.3	Unprotected Hotline Receiving		R	R	R		
2.12.4	Protected Hotline Receiving		R	R	R		
2.12.5	User Interoperability		R	R	R		
	SECTION 3 - Multi-Level Precedence and Preemption (MLPP)						
3.1.1	Description	R	R	R	R	R	
3.1.2	Precedence Levels	R	R	R	R	R	
3.1.3	Announcements	R	R	R	R	R	
3.1.4	Invocation and Operation.	R	R	R	R	R	
3.2	Preemption in the Network	R	R	R	R	R	
3.2.1	Network Facilities Active With Lower Precedence Calls	R	R	R	R	R	
3.2.1.1	CANCEL to (CANT) / CANCEL from (CANF)	R	R	R	C		
3.2.2	Network Facilities Active With Equal or Higher Precedence Call	R	R	R	R	R	
3.2.3	MLPP Trunk Selection (Hunting).	R	R	R	R		
3.2.3.1	Hunt Sequence for Trunks	R	R	R	R		
3.2.3.1.1	ROUTINE Calls	R	R	R	R		
3.2.3.1.2	Precedence Calls Above ROUTINE	R	R	R	R		
3.2.3.1.2.1	Method 1	R	R	R	R		
3.2.3.1.2.2	Method 2	R	R	C	C		
3.2.4.1	Calls From non-MLPP Networks	R	R	R	R		
3.2.4.2	Precedence Calls to Non-MLPP Networks	R	R	R	R		

PARAGRAPH	SUBJECT						
		TS	MFS	EOS	SMEO	PBX1	PBX2
3.3	Precedence Call Diversion		R	R	R	R	
3.4.1	Channel Associated Signaling (CAS)	R	R	R	R	C	
3.4.2	Primary Rate Interface (PRI)	R	R	R	R	R	
3.4.3	Common Channel Signaling Number 7 (CCS7)	R	R	R	C		
3.5.1	Busy At The Called Party's Interface		R	R	R	R	
3.5.1.1	Line Active With A Lower Precedence Call		R	R	R	R	
3.5.1.2	Line Active With An Equal or Higher Precedence Call Above Routine		R	R	R	R	
3.6	ISDN Basic Rate Interface (BRI)		R	R	R	R	
3.6.2	Single B-Channel, Single Appearance, Single Directory Number (DN)		R	R	R	R	
3.6.2.1	Line Active With A Lower Precedence Call		R	R	R	R	
3.6.2.2	Line Active With An Equal or Higher Precedence Call		R	R	R	R	
3.6.3	Single B-Channel, Multiple Appearances, Single Directory Number (DN)	R	R	R	R	R	
3.6.4	Two (2) B-Channels, Multiple Appearances, Single Directory Number (DN)	R	R	R	R	R	
3.6.5	Two B-Channels, 2 Directory Numbers (DN)	R	R	R	R	R	
3.7.2	Precedence Level Information Elements	R	R	R	R	R	
3.7.3	Disconnect Message Information Cause Values	R	R	R	R	R	
3.7.4	Signal Information Element	R	R	R	R	R	
3.7.5	ANSI T1.619a Setup Message Called Party Number Format	R	R	R	R	R	
3.7.6	ANSI T1.619a and non-T1.619a Interaction	R	R	R	R	R	
3.8.1	Precedence Call Waiting	C	C	C	C	C	
3.8.1.1	Busy with higher precedence call	C	C	C	C	C	
3.8.1.2	Busy with equal precedence call	C	C	C	C	C	
3.8.1.3	Busy with lower precedence call	C	C	C	C	C	

PARAGRAPH	SUBJECT						
		TS	MFS	EOS	SMEO	PBX1	PBX2
3.8.1.4	No Answer	C	C	C	C	C	
3.8.2	Call Forwarding	C	C	C	C	C	
3.8.2.1	Call Forwarding at a Busy Station	C	C	C	C	C	
3.8.2.2	Call Forwarding - No Reply at Called Station	C	C	C	C	C	
3.8.3.1	Call transfer interaction at different precedence levels		C	C	C	C	
3.8.3.2	Call transfer interaction at same precedence levels		C	C	C	C	
3.8.4	Call Hold	C	C	C	C	C	
3.8.5	Three-Way Calling (TWC)		C	C	C	C	
3.8.6	Call Pick-Up		C	C	C	C	
3.8.7.1	Conference Precedence Level	R	R	C	C	C	
3.8.8	Multiline Hunt Service		C	C	C	C	
3.8.9	Community of Interest (COI)	R	R	R	C	C	
3.8.9.2.1	COI Screening treatment for Originating Call Requests	R	R	R	C	C	
3.8.9.2.2	COI Screening treatment for Terminating Call Requests	R	R	R	C	C	
3.9	MLPP Common Channel Signaling Number 7 (CCS7)	R	R	R	C		
3.9.3	Look-Ahead For Busy	R	R	R	C		
3.9.4	Precedence Parameters	R	R	R	C		
3.9.4.1	Actions Required at Originating Exchange	R	R	R	C		
3.9.4.2	MLPP CCS7 Transaction Capability Application Part (TCAP) -Definitions and Functions of Transaction Capability (TC) Operations, Parameters, and Error Codes	R	R	R	C		
3.9.4.2.1	Parameters	R	R	R	C		
3.9.4.2.1.1	Bearer Capability Supported - 1001001	R	R	R	C		

PARAGRAPH	SUBJECT						
		TS	MFS	EOS	SMEO	PBX1	PBX2
3.9.4.2.1.2	Circuit Identification Code – 10011010	R	R	R	C		
3.9.4.2.1.3	Call Reference – 10011100	R	R	R	C		
3.9.5	RELEASE Message Cause Values	R	R	R	C		
3.9.6	DSN MLPP CCS7 INITIAL ADDRESS MESSAGE (IAM) CALLED PARTY NUMBER FORMAT.	R	R	R	C		
3.10	Channel associated signaling to Common channel signaling (CAS-to-CCS) trunk inter-working in a mixed media network	R	R	R	C		
3.11.1	Electronic Key Telephone Systems (EKTS)		C	C	C	C	
3.11.1.1	Call Appearances		C	C	C	C	
3.11.1.2	Hold		C	C	C	C	
3.11.1.3	DN Bridging		C	C	C	C	
3.11.1.4	Intercom Calling		C	C	C	C	
3.11.1.5	Abbreviated Or Delayed Ringing Treatment On Incoming Calls		C	C	C	C	
3.11.1.6	Bridged Call Exclusion (BCE)		C	C	C	C	
3.11.1.7	Non-ISDN Users		C	C	C	C	
3.12.1	Precedence Parameter		C	C	C	C	
3.12.2	Cause Values & Location Codes		C	C	C	C	
3.13	Network Management Manual Controls	R	R	R	C		
3.14	Data Collection		R	R	R		
	SECTION 4 - Call Processing						
4.1.1	Origination Treatment	R	R	R	R	R	
4.1.1.1	Originating Busy	R	R	R	R	R	
4.1.2	Termination Treatment	R	R	R	R	R	C
4.1.2.1	Busy or Idle Status	R	R	R	R	R	C
4.1.3	Release Treatment	R	R	R	R	R	C
4.1.4	Interruption Treatment	R	R	R	R	R	C
4.1.5	Connections	R	R	R	R	R	C

PARAGRAPH	SUBJECT						
		TS	MFS	EOS	SMEO	PBX1	PBX2
4.1.6	Class of Service	R	R	R	R	C	C
4.2	Primary and Alternate Routing	R	R	R	R		
4.3.1	Ear & Mouth (E&M) Lead Signaling States	C	C	C	C	C	C
4.3.2	Four-Wire Analog User Access Lines	C	C	C	C	C	C
4.3.3	Two-Wire User Access Lines		R	R	R	R	C
4.3.4.1	Busy/Idle Status		R	R	R	R	
4.4.1	Originating Call Processing	R	R	R	R		
4.4.2	Terminating Call Processing	R	R	R	R		
4.5.1.1	DSN User Dialing.	R	R	R	R	R	
4.5.1.2	Interswitch and Intraswitch Dialing.	R	R	R	R	C	
4.5.1.2.1	Seven-Digit Dialing	R	R	R	R	R	
4.5.1.2.2	Ten-Digit Dialing	R	R	R	R	R	
4.5.1.3	Access Code	R	R	R	R	R	
4.5.1.3.1	Access Digit	R	R	R	R	R	
4.5.1.3.2	Precedence Digit	R	R	R	R	R	
4.5.1.3.3	Service Digits	R	R	R	R	R	
4.5.1.4	Route Code		R	R	R	R	
4.5.1.5	Area Code	R	R	R	R	R	
4.5.1.6	Switch Code	R	R	R	R	R	
4.5.1.7	Line Number	R	R	R	R	R	
4.5.1.8	Emergency Service 911 Conflict Resolution		R	R	R	R	
Table 4-9	DSN Switch MFR1 Outpulsing Digit Format	R	R	R	C	C	
Table 4-10	DSN Switch DTMF Outpulsing Digit Format	R	R	R	C	C	
4.5.2.1	Route Control Digit (RCD)	R	R				
4.5.3	Standard Directory Numbers		R	R	R	R	
4.5.4	Standard Test Numbers	R	R	R	C	C	
4.5.5	Base Services - Abbreviated Numbers	R	R	R	R	C	
4.5.6	Digit Reception Requirements	R	R	R	R	R	

PARAGRAPH	SUBJECT						
		TS	MFS	EOS	SMEO	PBX1	PBX2
4.5.7	Digit Registration Capacity	R	R	R	R		
4.5.8	Screening		R	R	R	C	C
4.5.8.1	Zone Restriction Servicing of Local Originators		R	R	R	C	C
	SECTION 5 - Signaling						
5.1	Network Power Systems for External Interfaces	R	R	R	R		
5.2.1	Loop Start Line		R	R	R	R	C
5.2.2	Ground Start Line		R	R	R	R	C
5.3.1	Reverse Battery (RB)		R	R	R	R	C
5.3.2	Immediate Start	R	R	R	C	C	C
5.3.3.1	Normal Wink Start Operation	R	R	R	R	C	C
5.3.3.2	Glare Operation	R	R	R	R	C	C
5.3.3.3.1	Wink Start	R	R	R	R	C	C
5.3.3.3.2	Glare Resolution	R	R	R	R	C	C
5.3.4	Delay Dial		C	C	C	C	C
5.3.5	Call for Service Timing	R	R	R	R	R	C
5.3.6	Guard Timing	R	R	R	R	R	C
5.3.7	Satellite Interface	R	R	R	R	C	C
5.3.8	Disconnect Control	R	R	R	R	C	C
5.3.9	Reselect or Retrial	R	R	R	R	C	C
5.3.10	Off-Hook Supervision Transitions (Unexpected Stop)		R	R	R	C	C
5.4.1	Dial-Pulse (DP) Signals	R	R	R	R	C	C
5.4.2	Dual Tone Multi-Frequency (DTMF) Signaling	R	R	R	R	C	C
5.4.2.1	Standard Digit Format for Precedence	R	R	R	C	C	
5.4.3	MF (R1) 2/6 Signaling	R	R	R	C	C	
5.5.1	Ringing		R	R	R	R	

PARAGRAPH	SUBJECT						
		TS	MFS	EOS	SMEO	PBX1	PBX2
5.5.2	DSN Information Signals		R	R	R	R	
5.6	Common Channel Signaling Number 7 (CCS7)	R	R	R	C		
5.6.1	CCS7 Network Structure	R	R	R	C		
5.6.2	Functional Description of the Signaling System Message Transfer Part (MTP)	R	R	R	C		
5.6.2.1.1	Signaling Data Link Functions (Level 1)	R	R	R	C		
5.6.2.1.2	Signaling Link Functions (Level 2)	R	R	R	C		
5.6.3.1	Routing Label	R	R	R	C		
5.6.3.2	Handling Messages Under Signaling Link Congestion	R	R	R	C		
5.6.3.3	Message Discrimination and Distribution Functions	R	R	R	C		
5.6.3.4	Signaling Network Management	R	R	R	C		
5.6.3.5	Changeback	R	R	R	C		
5.6.4	Noncircuit-Related Information Exchange - Signaling Connection Control Part (SCCP)	R	R	C	C		
5.6.5	Additional Procedures for Switch-to-Switch/SCP TCAP Messages	R	R	R	C		
5.6.6	Message Transfer Part (MTP) Restart	R	R	R	C		
5.6.7	Signaling Link Management	R	R	R	C		
5.6.8	Signaling Route Management	R	R	R	C		
5.6.9.1	Service Indicator	R	R	R	C		
5.6.9.2	Subservice Field	R	R	R	C		
5.6.10	Formats and Codes of Signaling Network Management Messages	R	R	R	C		
5.6.11	Numbering of Signaling Point Codes	R	R	R	C		
5.6.12.1	Scope, Purpose, and Application	R	R	C	C		
5.6.12.2	End-To-End Signaling	R	R	C	C		
5.6.13	Formats and Codes – Integrated Services Digital Network (ISDN) User Part	R	R	R	C		

PARAGRAPH	SUBJECT						
		TS	MFS	EOS	SMEO	PBX1	PBX2
	Parameters						
5.6.13.1	Notification Indicator	R	R	R	C		
5.6.13.2	IS-UP Messages	R	R	R	C		
5.6.13.3	IS-UP Parameters	R	R	R	C		
5.7.1.1	Application		R	R	R	R	C
5.7.1.2	Physical Layer.		R	R	R	R	C
5.7.1.2.1	S/T Reference Point		R	R	R	R	C
5.7.1.3	Data-Link Layer.	R	R	R	R	R	C
5.7.1.3.1	Data-Link Connections	R	R	R	R	R	C
5.7.1.3.2	Peer-to-Peer Procedures of the Data-Link Layer	R	R	R	R	R	C
5.7.1.4	Layer 3 DSN User-to-Network Signaling	R	R	R	R	R	C
5.7.1.4.2	DSN User-to-Network Signaling for Circuit-Switched (CS) Bearer Service	R	R	R	R	R	C
5.7.1.4.3	Sequence of Messages for DSN Circuit-Switched (CS) Calls	R	R	R	R	R	C
5.7.1.4.4	Message Functional Definitions and Content	R	R	R	R	R	C
5.7.1.4.5	General Message Format and Info. Elements (IE) Coding	R	R	R	R	R	C
5.7.1.4.6	Supplementary Services		C	C	C	C	C
	SECTION 6 - Transmission						
6.0	DISN/DSN Transmission Interface	R	R	R	R	R	R
6.1	Input Impedance	R	R	R	R	R	R
6.2	Inserted Connection Loss	R	R	R	R	R	R
6.2.1	Average Loss At 1004 Hz And Loss Control	R	R	R	R	R	R
6.2.2	Loss Variability At 1004 Hz	R	R	R	R	R	R
6.2.3	Attenuation Distortion	R	R	R	R	R	R
6.2.4	Tracking Error	R	R	R	R	R	R

PARAGRAPH	SUBJECT						
		TS	MFS	EOS	SMEO	PBX1	PBX2
6.3	Frequency Response	R	R	R	R	R	R
6.4	Overload Level	R	R	R	R	R	R
6.5	Return Loss	R	R	R	R	R	R
6.5.1	Two-Wire Line Return Loss	R	R	R	R	R	R
6.5.2	Four-Wire Trunk Return Loss (Impedance)	R	R	R	R	R	R
6.6	Longitudinal Balance	R	R	R	R	R	R
6.7	60 Hz Longitudinal Current	R	R	R	R	R	R
6.8	Idle Channel Noise	R	R	R	R	R	R
6.8.1	C-Message Weighting	R	R	R	R	R	R
6.8.2	Flat-Weighting Noise	R	R	R	R	R	R
6.9	Power Line Interference	R	R	R	R	R	R
6.10	Impulse Noise	R	R	R	R	R	R
6.11	Crosstalk Coupling	R	R	R	R	R	R
6.12	Intermodulation Distortion	R	R	R	R	R	R
6.13	Signal To Distortion Ratio (C-Notched Noise)	R	R	R	R	R	R
6.14	Absolute Delay	R	R	R	R	R	R
6.15	Envelope Delay Distortion	R	R	R	R	R	R
6.15.1	Echo Path Delay	R	R	R	R	R	R
6.16	Bit Integrity	R	R	R	R	R	R
6.17	Switched Digital Bit Error Rate	R	R	R	R	R	R
6.18	Encoding And Decoding Levels	R	R	R	R	R	R
6.18.1	DSN Fixed Loss Plan	R	R	R	R	R	R
6.18.1.1	Switch Transmission Level Points (TLPs).	R	R	R	R	R	R
	SECTION 7 - System Interfaces						
7.1	PCM-24 Digital Trunk Interface	R	R	R	R	R	R
7.1.1	Interface Characteristics	R	R	R	R	R	R
7.1.2	Supervisory Channel Associated Signaling	R	R	R	R	C	C

PARAGRAPH	SUBJECT						
		TS	MFS	EOS	SMEO	PBX1	PBX2
7.1.3	Clear Channel Capability (CCC)	R	R	R	R	R	C
7.1.4	Alarm and Restoral Requirements	R	R	R	R	R	C
7.2	PCM-30 Digital Trunk Interface	R	R	R	R	C	C
7.2.1	Supervisory Channel Associated Signaling	R	R	R	R	C	C
7.2.2	Alarm and Restoral Requirements	R	R	R	R	C	C
7.3	Interoperation of PCM-24 and PCM-30 Systems	R	R	R	R	C	C
7.4	Analog Trunk Interface	C	C	C	C	C	C
7.4.1	E&M Trunk Circuits	C	C	C	C	C	C
7.4.2	Single Frequency (SF) Trunk Circuits	C	C	C	C	C	C
7.4.3	Dual Frequency (DF) Trunk Circuits	C	C	C	C	C	C
7.5	Integrated Digital Loop Carrier (IDLC)	R	R	R	R	C	C
	SECTION 8 - Tandem Switching						
8.1	Network Plan	R	R				
8.3	Tandem Capabilities	R	R				
8.4	Call Processing	R	R				
8.5	Signaling	R	R				
8.6	Transmission	R	R				
8.7	Measurements and Administration	R	R				
8.8	Service Standards	R	R				
8.9	Network Management (NM)	R	R				
	SECTION 9 - Network Management						
9.1	DISA Network Traffic Management Operating System (NTMOS)	R	R	R	R		
9.2.1.1	Data Quality	R	R	R	R		
9.2.2.1.1	Traffic Measurements	R	R	R	R		
9.2.2.1.2	Reference Data	R	R	R	C		
9.2.2.2	Line Servicing	R	R	R	C		

PARAGRAPH	SUBJECT						
		TS	MFS	EOS	SMEO	PBX1	PBX2
9.2.2.3	Trunk Groups	R	R	R	C		
9.2.2.4	Call Processor	R	R	R	C		
9.2.2.5	Switch Services	R	R	R	C		
9.2.2.6	Special Studies	R	R	R	C		
9.2.2.7	Remote Switching Site		C	C	C		
9.2.2.8	Features		C	C	C		
9.2.3	Common Channel Signaling Network (CCSN) Measurements	R	R	R	C		
9.2.4	ISDN Measurements	R	R	R	R		
9.2.5	Traffic Capacity	R	R	R	R		
9.3	Configuration Management	R	R	R	R		
9.4	Fault Management	R	R	R	R		
9.5.1	DSN Settable CDR Fields.		R	R	R		
9.5.2	Data Retention		R	R	C		
9.6.1	Automatic Controls	R	R	R	C		
9.6.1.1	Automatic Congestion Controls (ACC)	R	R	R	C		
9.6.1.2	Trunk Reservation (TRE)	R	R	R	C		
9.6.1.3	Selective Incoming Load Controls (SILC)	R	R	R	C		
9.6.1.4	Precedence Access Threshold (PAT)		C				
9.6.2.1	Essential Service Protection (ESP)	R	R	R	C		
9.6.3	Manual Controls	R	R	R	C		
9.6.3.1	Trunk Group Controls	R	R	R	C		
9.6.3.1.1	Cancel From (CANF)	R	R	R	C		
9.6.3.1.2	Cancel To (CANT)	R	R	R	C		
9.6.3.1.3	SKIP	R	R	R	C		
9.6.3.1.4	Reroute (RR)	R	R	R	C		
9.6.3.1.4.1	Single-Via-Route	R	R	R	C		
9.6.3.1.4.2	Multiple-Via-Route	R	R	R	C		

PARAGRAPH	SUBJECT						
		TS	MFS	EOS	SMEO	PBX1	PBX2
9.6.3.1.4.3	Overflow (ORR) vs Immediate Reroute (IRR)	R	R	R	C		
9.6.3.2	Code Controls	R	R	R	C		
9.6.3.2.1	Code Controls - Code Gapping Controls	R	R	R	C		
9.6.3.3	Total Office Manual Control Removal - Request/Response	R	R	R	C		
9.6.4	Treatment Options Of Calls That Are Terminated	R	R	R	C		
9.7	Remote Access to Switch	R	R	R	R		
	SECTION 10 - Integrated Services Digital Network (ISDN) Generic Requirements	**Refer to Tables in Section 10**					
	SECTION 11 - Synchronization						
11.1	Timing Modes	R	R	R	R		
11.1.1.1	External Timing Mode	R	R	R	C		
11.1.1.2	Line Timing Mode	R	R	R	R	R	
11.1.2.1	General	R	R	R	C		
11.1.2.2	Stratum 4 Clock				R	R	C
11.2	Synchronization Performance Monitoring Criteria	R	R	R	C	C	C
11.3	DS1	R	R	R	C	C	C
11.4	DS0 Traffic Interconnects	R	R	R	C	C	C
	Section 12 - Reliability	R	R	R	R	R	
	Section 13 - Security	R	R	R	R	R	

LEGEND:

TS – Tandem Switch
MFS – Multifunction Switch
EOS – End Office Switch
SMEO – Small End Office
RSU – Remote Switch Unit
PBX1 – Private Branch Exchange 1
PBX2 – Private Branch Exchange 2
DVX – Deployed Voice Exchange
R – Required / C – Conditional

Appendix 2 - Deployable Voice Exchanges/Switch (DVX)

A2.1 Background

A2.1.1 Background

The Executive Agent for Theater Joint Tactical Networks (EA-TJTN), in consonance with responsibilities assigned by the Assistant Secretary of Defense for Command, Control, Communications, and Intelligence (ASD C3I), oversees, coordinates, and evaluates initiatives within the tactical networked-communications community of the Department of Defense (DoD) with the aim of establishing the predeployment interoperability of networked-communications systems used by joint forces during tactical contingency missions. In connection with those responsibilities, the US Military Communications-Electronics Board (MCEB) tasked the Theater Joint Tactical Network Configuration Control Board (TJTN-CCB), which is chaired by and advises the EA-TJTN, to develop a generic set of tactical interoperability requirements as certification criteria for joint networked-communications systems. In satisfying that task and to ensure interoperability requirements, test criteria, designs, and approaches are valid for the interoperability certification of systems destined to function in joint tactical networks, the TJTN-CCB has developed the DSSGR. The DSSGR establish evaluation requirements for legacy (Unit Level Circuit Switch [ULCS], Common Baseline Circuit Switch [CBCS], and TRI-TAC systems) and emerging circuit-switched systems (REDCOM, Lucent, AVAYA, etc.). Many things have changed since the initial fielding of TRI-TAC systems in the eighties. For one, the Office of the Secretary of Defense has directed that interoperability-certification requirements for circuit-switched systems now be articulated in a Joint Staff-approved Initial Capabilities Document (ICD) for Milestone A (formerly the Mission Need Statement [MNS]) and a Capabilities Development Document (CDD) for Milestone B and Capabilities Production Document (CPD) for Milestone C (formerly an Operational Requirements Document [ORD]) with regard to acquisitions. Key Performance Parameters (KPP) for CDDs and CPDs must address interoperability. In pursuing their acquisition initiatives, combatant commands (COCOMs), Services, and Defense agencies should use the DSSGR as a guideline for the purchase of commercial, off-the-shelf (COTS) equipment, as well for the development of systems that need to interface in deployed networks.

A2.1.2 Purpose

The purpose for developing the DSSGR as an appendix to the Defense Switch Network (DSN) Generic Switching Center Requirements (GSCR) document was to consolidate interoperability-certification requirements to the maximum extent possible and incorporate them as part of requirements for the overarching Global Information Grid (GIG) in support of network-centric warfare. Another purpose for including the DSSGR as part of the DSN GSCR was to amend the DSN GSCR so as to allow them to include deployed communication systems and to make available a total GIG interoperability-requirements package to submit to Joint Staff for approval. This appendix supports the overall DoD interoperability-assurance enterprise. It likewise supports Joint Interoperability Test Command (JITC) interoperability-certification testing by serving as a requirements reference for, not only legacy-system evaluations, but COTS Deployable Voice Exchange (DVX) assessments and certification tests. In order to eliminate redundancy in the overall DSN GSCR document with the inclusion of this appendix, the interoperability requirements for small end offices (SMEOs) are not covered in this appendix, as they appear in and may be obtained from the DSN GSCR base document, where the base document addresses requirements for SMEOs. That section provides basic guidance for satisfying the certification requirements for tactical voice systems employed as part of an Operational Area Network (OAN), which is the deployed part of the GIG. This appendix serves as a ready-reference that specifies OAN voice connectivity and interoperability-certification requirements and for introducing allied/coalition voice networks into the overall "infosphere" required for effective combined operations. The information provided herein is the product of a series of meetings held in Reston, Virginia, between EA-TJTN and Defense Information Systems Agency (DISA) DSN personnel, the efforts of the TJTN-CCB, the stipulations of CJCSI 6212.01B, and other interoperability-promoting publications.

A2.2 Applicability

This appendix applies to all deployable "Black" OAN voice-switched systems that are to be integrated into a deployed JTF network. The term "Black OAN voice-switched systems" refers to DVX voice-switched systems that do not operate within the Defense Red Switch Network (DRSN) or conform to its guidelines. Although DRSN-capable voice switches are deployed within the OAN, they operate via a DRSN gateway and within a separate infrastructure. Communications Security (COMSEC) and secure enclaves are the means of security protection imposed within the Black OAN infrastructure along with policy guidance and doctrinal procedures. The requirements in this appendix are also applicable for voice-switched systems that are about to be procured, installed, engineered, reengineered, modified (in terms of both software or hardware), or tested and become OAN network elements. The requirements are to be applied by the JITC or, for that matter, anyone else (vendors, life-cycle support activities, system proponents, etc.) in conducting joint interoperability testing (which may be part of an assessment process to facilitate later JITC certification).

A2.3 Deployment Context

A2.3.1 Voice Networks

In order to apply scenario and "string" criteria appropriately for interoperability-certification testing, a voice network must be established and have an architecture that is representative of the OAN within a typical COCOM joint tactical network. A communications structure in support of a notional deployed joint force must be established IAW joint doctrine within the context of a joint task force (JTF) network operating as the OAN within the Tier 0 through 4 environment and serving as the core infrastructure for a certification test effort. It should be noted that Tier 0 is the sustaining base, while Tier 1 is the Defense Information Systems Network, Tier 2 the Standardized Tactical Entry Point (STEP), Tier 3 the COCOM headquarters/Theater C4ISR Coordination Center, and Tier 4 the JTF backbone network. Annex A, Figure 1, provides a generic OAN voice-network diagram that depicts a notional JTF voice-system infrasturcture as it may appear during typical theater deployment. Such would be the environment where the requirements in this appendix would apply. Any deviation to accommodate a transition to new functional or switched-system technologies requires a reevaluation and possibly a change in the foregoing scheme of doing business, as well as a modification in current policies and standard operating procedures for effective test and evaluation.

A2.3.2 Deployed Voice Exchanges / Switch DVX's

DVX switches can be either COTS or legacy voice-switched systems. Mission requirements, functional capabilities, signaling, and doctrinal employment within a network dictate the appropriate positioning of these switches in a network. Deployed units draw necessary strategic support from STEP sites through either IDNXs or SMUs, depending on the signaling being used to access gateways into the DSN backbone. Annex C tables specify requirements and sub-requirements for interoperability certification of DVX switches (both legacy and COTS).

A2.3.3 Deployed Voice Exchanges / Access to DSN and/or Commercial Gateways

DVXs accessing DSN or commercial gateways, by doctrine, employ vertical and lateral connectivity from the DSN and commercial backbones. Satellite Access Requests/Gateway Access Requests (SAR/GAR) are used to identify access parameters for the target network. DSN and commercial gateway-configuration specifics can be found in CJCSI 6215.01B, dated 23 September 01: DISA JIEO Report 8249, dated March 97; the latest version of the GSCR document (currently under revision); and DCAC 370-175-13, dated April 1988 (currently under revision to become DISAC 370-175-13).

A2.4 Conclusion

Annex B maps requirements to paragraphs in the DSN GSCR, which are deemed applicable to deployed switching systems. The TJTN-CCB, as a joint body representing the deployed networked-communications community, will provide the Joint Staff with a recommendation to adopt the DSSGR and thereby establish evolutionary baseline requirements for joint interoperability certification of deployed switched systems. JITC as the joint interoperability-certification authority will apply these requirements with its test plans and network assessments. It should be noted that the DSN GSCR document and Generic Switch Test Plan (GSTP), dated August 2001, are essential publications for the development of a generic set of requirements for use as the basis for interoperability testing.

ANNEXES:

A - Notional Voice Diagram

B - Voice Certification Requirements Table and Explanatory Information

ANNEX A

NOTIONAL VOICE DIAGRAMS

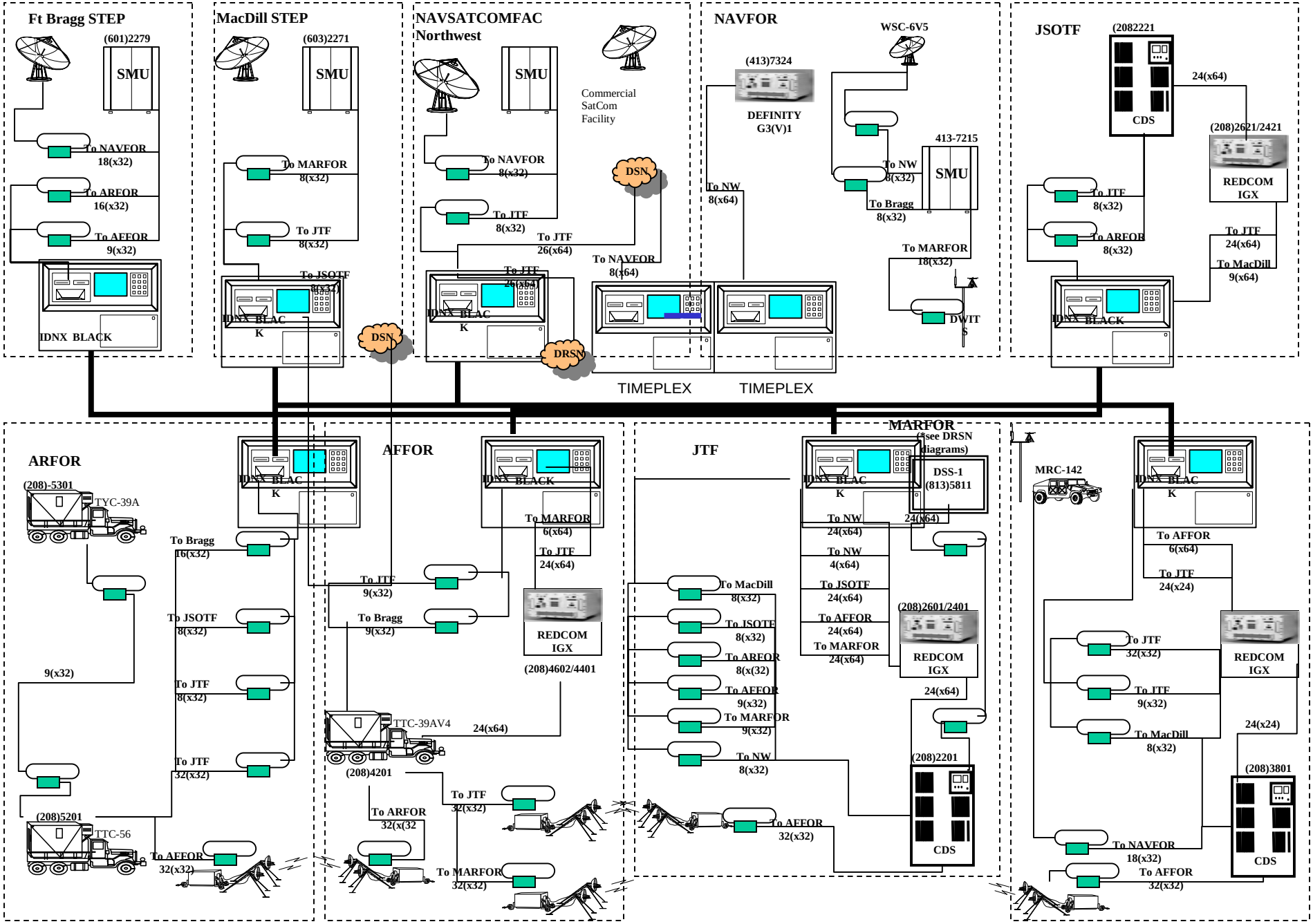

Figure A2-1. National Deployable Voice Network

ANNEX B

VOICE CERTIFICATION REQUIREMENTS
(ONLY DSN GSCR FUNCTIONAL REQUIREMENTS DEEMED APPLICABLE TO DEPLOYED SWITCHES ARE IN THIS TABLE)

Table A2-1: Voice Certification Requirements

ITEM NUMBER	PARAGRAPH IN GSCR	SUBJECT	TYPE OF SWITCHES	
			DVX/COTS	DVX/LEGACY
1	2.0	SECTION 2 - Capabilities and Features	R	R
a	2.1.1	Individual Line	R	R
c	2.1.2	CLASS Feature: Selective Call Rejection	C	C
d	2.1.3	Denied Originating Service	C	C
e	2.1.4	Code Restriction and Diversion	R	C
f	2.1.5.1	Call Waiting (CW)	C	C
g	2.1.5.2	Cancel Call Waiting	C	C
h	2.1.6	Three-Way Calling (TWC)	C	C
i	2.1.7	Add-On-Transfer and Conference Calling Features	C	C
j	2.1.7.1	Call Transfer Individual - All Calls	C	C
k	2.1.7.2	Call-Transfer - Internal Only	C	C
l	2.1.7.3	Call Transfer - Individual - Incoming Only/Add-on Consultation Hold - Incoming Only	C	C
m	2.1.7.4	Call Transfer - Outside	C	C
n	2.1.7.5	Call Transfer-Add-on to Fully Restricted Station	C	C
o	2.1.7.6	Call Transfer Attendant	C	C
p	2.1.7.7	Call Hold	C	C
q	2.1.7.8	Conference Calling - Six Way Station Controlled	C	C
r	2.1.8.1	Call Forwarding Variable	C	C

s	2.1.8.2	Call Forwarding Busy Line (CFBL)	C	C
t	2.1.8.3	Call Forwarding Don't Answer All Calls	C	C
u	2.1.8.4	CLASS Feature: Selective Call Forwarding	C	C
v	2.1.9.1	Call Pick-Up	C	C
w	2.1.9.2	Directed Call Pick-Up	C	C
x	2.1.9.3	Directed Call Pick-Up without Barge-In	C	C

ITEM NUMBER	PARAGRAPH IN GSCR	SUBJECT	TYPE OF SWITCHES	
			DVX/COTS	DVX/LEGACY
2	2.2	Attendant Features		
a	2.2.1	Precedence and Preemption	C	C
b	2.2.2	Call Display	C	C
c	2.2.3	Class of Service Override	C	C
d	2.2.4	Busy Override and Busy Verification	C	C
e	2.2.5	Night Service	C	C
f	2.2.6	Automatic Recall of Attendant	C	C
g	2.2.7	Calls in Queue to the Attendant	C	C
3	2.3	Customer Access Interfaces		
a	2.3.1	PBX Line	C	C
b	2.3.2	Direct Inward Dialing (DID)	C	C
c	2.3.3	National ISDN 1/2 Basic Access	R	C
d	2.3.4	National ISDN 1/2 Primary Access	R	C
e	2.3.5	Analog Line	C	C
4	2.4	Public Safety Features		
a	2.4.1	Basic Emergency Service (911)	C	C
b	2.4.2	Tracing of Terminating Calls	R	R
c	2.4.3	Outgoing Call Tracing	R	R
d	2.4.4	Tandem Call Trace	R	R
e	2.4.5	Trace of A Call in Progress	R	R
5	2.5	Trunk, Line, and Special Services		
a	2.5.1.1	100-Type Test Line	R	R
b	2.5.1.2	101-Type Test Line	C	C
c	2.5.1.3	102-Type Test Line	C	C
d	2.5.1.4	105-Type Test Line	C	C
e	2.5.1.5	Synchronous Test Line	C	C
f	2.5.1.6	Non-synchronous Test Line	C	C
g	2.5.1.7	Permanent Busy Test Line	C	C
h	2.5.1.8	108-Type Test Line	C	C

i	2.5.2.1	Dialable Cable Pair Locator Tone	C	C
j	2.5.2.2	DTMF Station Test Circuit	C	C
k	2.5.3	Test Incoming Trunks in Tandem or Local State	C	C
l	2.5.4.1	Manual Test of Line	R	R
m	2.5.4.2	Manual Test of Trunks	R	R
n	2.5.5	Trunk Group - Remove from Service (Make Busy)	R	R
o	2.5.6	Trunk Group - Restore to Service (Make Idle)	R	R
p	2.5.7	Carrier Group Alarm (CGA)	R	R
q	2.5.7.1	Software Carrier Group Alarm	C	C

ITEM NUMBER	PARAGRAPH IN GSCR	SUBJECT	TYPE OF SWITCHES	
			DVX/COTS	DVX/LEGACY
6	2.6	Preset Conferencing	R	R
a	2.6.1	Conference Notification Recorded Announcement	C	C
b	2.6.2	Automatic Retrial and Alternate Address	C	C
c	2.6.3	Bridge Release	R	R
d	2.6.4	Secondary Conferencing	R	R
5	2.7	Address Translation	R	R
6	2.8	Nailed-Up Connections	C	C
7	2.9	Assured Dial Tone	C	R
8	2.12	DSN Hotline Service (DAS)	C	R
9	3.0	SECTION 3 - Multi-Level Precedence and Preemption (MLPP)		
a	3.1.1	Description	R	R
b	3.1.2	Precedence Levels	R	R
c	3.1.3	Announcements	C	C
d	3.1.4	Invocation and Operation	R	R
10	3.2	Preemption in the Network		
a	3.2.1	Network Facilities Active With Lower Precedence Calls	R	R
b	3.2.1.1	CANCEL to (CANT)/CANCEL from (CANF)	C	C
c	3.2.2	Network Facilities Active With Equal or Higher Precedence Call	C	C
d	3.2.3	MLPP Trunk Selection (Hunting)	R	R
e	3.2.3.1	Hunt Sequence for Trunks	R	R
f	3.2.3.1.1	ROUTINE Calls	R	R
g	3.2.3.1.2	Precedence Calls Above ROUTINE	R	R
h	3.2.3.1.2.1	Method 1	R	R
i	3.2.3.1.2.2	Method 2	C	C

j	3.2.4.1	Calls From non-MLPP Networks	R	R
k	3.2.4.2	Precedence Calls to Non-MLPP Networks	R	R
11.	3.3	Precedence Call Diversion	R	R
12.	3.4	Preempt Signaling		
a	3.4.1	Channel Associated Signaling (CAS)	R	R
b	3.4.2	Primary Rate Interface (PRI)	R	N/A
c	3.4.3	Common Channel Signaling Number 7 (CCS7)	C	N/A
d	3.5.1	Busy At The Called Party's Interface	R	R
e	3.5.1.1	Line Active With A Lower Precedence Call	R	R

ITEM NUMBER	PARAGRAPH IN GSCR	SUBJECT	TYPE OF SWITCHES	
			DVX/COTS	DVX/LEGACY
f	3.5.1.2	Line Active With An Equal or Higher Precedence Call Above Routine	C	C
13	3.6	ISDN MLPP (BRI)	R	N/A
a	3.6.2.1	Line Active With A Lower Precedence Call	R	N/A
b	3.6.2.2	Line Active With An Equal or Higher Precedence Call	R	N/A
c	3.6.3	Single B-Channel, Multiple Appearances, Single Directory Number (DN)	R	N/A
d	3.6.4	Two (2) B-Channels, Multiple Appearances, Single Directory Number (DN)	R	N/A
c	3.6.5	Two B-Channels, 2 Directory Numbers (DN)	R	N/A
	3.7	ISDN MLPP (PRI)	R	N/A
d	3.7.2	Precedence Level Information Elements	R	N/A
e	3.7.3	Disconnect Message Information Cause Values	R	N/A
f	3.7.4	Signal Information Element	R	N/A
g	3.7.5	ANSI T1.619a Setup Message Called Party Number Format	R	N/A
h	3.7.6	ANSI T1.619a and non-T1.619a Interaction	R	N/A
14	3.8	MLPP INTERACTIONS		
a	3.8.1	Precedence Call Waiting	C	C
b	3.8.1.1	Busy with higher precedence call	C	C
c	3.8.1.2	Busy with equal precedence call	C	C
d	3.8.1.3	Busy with lower precedence call	C	C

e	3.8.1.4	No Answer	C	C
f	3.8.2	Call Forwarding	C	C
g	3.8.2.1	Call Forwarding at a busy station	C	C
h	3.8.2.2	Call Forwarding – no reply at called station	C	C
i	3.8.3	Call Transfer	C	C
j	3.8.3.1	Call Transfer interaction at different precedence levels	C	C
k	3.8.3.2	Call Transfer interaction at same precedence levels	C	C
l	3.8.4	Call Hold	C	C
m	3.8.5	Three-Way Calling (TWC)	C	C
n	3.8.6	Call Pick-Up	C	C
o	3.8.7.1	Conference Precedence Level	C	C

ITEM NUMBER	PARAGRAPH IN GSCR	SUBJECT	TYPE OF SWITCHES	
			DVX/COTS	DVX/LEGACY
p	3.8.8	Multiline Hunt Service	C	C
q	3.8.9	Community of Interest (COI)	C	N/A
r	3.8.9.2.1	COI screening treatment for originating call requests	C	N/A
s	3.8.9.2.2	COI screening treatment for terminating call requests	C	N/A
15	3.9	MLPP Common Channel Signaling Number 7 (CCS7)	C	N/A
a	3.9.3	Look Ahead For Busy	C	N/A
b	3.9.4	Precedence Parameters	C	N/A
c	3.9.4.1	Actions Required at Originating Exchange	C	N/A
d	3.9.4.2	MLPP CCS7 Transaction Capability Application Part (TCAP)	C	N/A
e	3.9.4.2.1	Parameters	C	N/A
f	3.9.4.2.1.1	Bearer Capability Supported – 1001001	C	N/A
g	3.9.4.2.1.2	Circuit Identification Code – 10011010	C	N/A
h	3.9.4.2.1.3	Call Reference – 10011100	C	N/A
i	3.9.5	Release Message cause Values	C	N/A
j	3.9.6	DSN MLPP CCS7 IAM	C	N/A
16	3.10	Channel Associated signaling to Common channel signaling (CAS-to-CCS) trunk inter-working in a mixed media network	C	N/A
17	3.11	MLPP interactions with EKTS	C	N/A
a	3.11.1	Electronic Key Telephone Systems (EKTS)	C	N/A
b	3.11.1.1	Call Appearances	C	N/A

c	3.11.1.2	Hold	C	N/A
d	3.11.1.3	DN Bridging	C	N/A
e	3.11.1.4	Intercom Calling	C	N/A
f	3.11.1.5	Abbreviated Or Delayed Ringing Treatment On Incoming Calls	C	N/A
g	3.11.1.6	Bridged Call Exclusion (BCE)	C	N/A
h	3.11.1.7	Non-ISDN Users	C	N/A
i	3.12.1	Precedence Parameter	C	C
j	3.12.2	Cause Values & Location Codes	C	C
k	3.13	Network Management	C	C
l	3.14	Data Collection	R	C
18	4.0	SECTION 4 - Call Processing		
a	4.1.1	Origination Treatment	R	R
b	4.1.1.1	Originating Busy	R	R
c	4.1.2	Termination Treatment	R	R
d	4.1.2.1	Busy or Idle Status	R	R
e	4.1.3	Release Treatment	R	R
f	4.1.4	Interruption Treatment	R	R

ITEM NUMBER	PARAGRAPH IN GSCR	SUBJECT	TYPE OF SWITCHES	
			DVX /COTS	DVX/LEGACY
g	4.1.5	Connections	R	R
h	4.1.6	Class of Service	R	R
i	4.2	Primary and Alternate Routing	R	R
j	4.3.1	Ear & Mouth (E&M) Lead Signaling States	R	R
k	4.3.2	Four-Wire Analog User Access Lines	C	C
l	4.3.3	Two-Wire User Access Lines	C	C
m	4.3.4.1	Busy/Idle Status	R	R
n	4.4.1	Originating Call Processing	R	R
o	4.4.2	Terminating Call Processing	R	R
19	4.5	Code Interpretation		
a	4.5.1.1	DSN User Dialing	R	R
b	4.5.1.2	Interswitch and Intraswitch Dialing	R	R
c	4.5.1.2.1	Seven-Digit Dialing	R	R
d	4.5.1.2.2	Ten-Digit Dialing	R	R
e	4.5.1.3	Access Code	R	R
f	4.5.1.3.1	Access Digit	R	R
g	4.5.1.3.2	Precedence Digit	R	R
h	4.5.1.3.3	Service Digits	R	R
i	4.5.1.4	Route Code	R	R
j	4.5.1.5	Area Code	R	R
k	4.5.1.6	Switch Code	R	R

l	4.5.1.7	Line Number	R	R
m	4.5.1.8	Emergency Service 911 Conflict Resolution	R	R
n	Table 4-9	DSN Switch MFR1 Outpulsing Digit Format	C	C
o	Table 4-10	DSN Switch DTMF Outpulsing Digit Format	R	R
p	4.5.2.1	Route Control Digit (RCD)	N/A	N/A
q	4.5.3	Standard Directory Numbers	R	R
r	4.5.4	Standard Test Numbers	R	R
s	4.5.5	Base Services - Abbreviated Numbers	R	R
t	4.5.6	Digit Reception Requirements	R	R
u	4.5.7	Digit Registration Capacity	R	R

ITEM NUMBER	PARAGRAPH IN GSCR	SUBJECT	TYPE OF SWITCHES	
			DVX/COTS	DVX/LEGACY
20	4.5.8	Screening	R	R
a	4.5.8.1	Zone Restriction Servicing of Local Originators	R	R
21	5.0	SECTION 5 - Signaling		
a	5.1	Network Power Systems for External Interfaces	R	R
b	5.2.1	Loop Start Line	R	C
c	5.2.2	Ground Start Line	R	C
d	5.3.1	Reverse Battery (RB)	R	C
e	5.3.2	Immediate Start	C	C
f	5.3.3.1	Normal Wink Start Operation	R	R
g	5.3.3.2	Glare Operation	R	R
h	5.3.3.3	Abnormal Operation	R	R
i	5.3.3.3.1	Wink Start	R	R
j	5.3.3.3.2	Glare Resolution	R	R
k	5.3.4	Delay Dial	C	C
l	5.3.5	Call for Service Timing	R	R
m	5.3.6	Guard Timing	R	R
n	5.3.7	Satellite Interface	R	R
o	5.3.8	Disconnect Control	R	R
p	5.3.9	Reselect or Retrial	R	R
q	5.3.10	Off-Hook Supervision Transitions (Unexpected Stop)	R	R
r	5.4.1	Dial-Pulse (DP) Signals	R	R
s	5.4.2	Dual Tone Multi-Frequency (DTMF) Signaling	R	R
t	5.4.2.1	Standard Digit Format for Precedence	C	C
u	5.4.3	MF (R1) 2/6 Signaling	C	C
v	5.5.1	Ringing	R	R
w	5.5.2	DSN Information Signals	R	R

ITEM NUMBER	PARAGRAPH IN GSCR	SUBJECT	TYPE OF SWITCHES	
			DVX/COTS	DVX/LEGACY
22	5.6	Common Channel Signaling Number 7 (CCS7)	C	N/A
a	5.6.1	CCS7 Network Structure	C	N/A
b	5.6.2	Functional Description of the Signaling System Message Transfer Part (MTP)	C	N/A
c	5.6.2.1	Signaling System Structure - Functional Levels	C	N/A
d	5.6.2.1.1	Signaling Data Link Functions (Level 1)	C	N/A
e	5.6.2.1.2	Signaling Link Functions (Level 2)	C	N/A
f	5.6.3.1	Routing Label	C	N/A
g	5.6.3.2	Handling Messages Under Signaling Link Congestion	C	N/A
h	5.6.3.3	Message Discrimination and Distribution Functions	C	N/A
i	5.6.3.4	Signaling Network Management	C	N/A
j	5.6.3.5	Changeback	C	N/A
k	5.6.4	Noncircuit-Related Information Exchange - Signaling Connection Control Part (SCCP)	C	N/A
l	5.6.5	Additional Procedures for Switch-to-Switch/SCP TCAP Messages	C	N/A
m	5.6.6	Message Transfer Part (MTP) Restart	C	N/A
n	5.6.7	Signaling Link Management	C	N/A
o	5.6.8	Signaling Route Management	C	N/A
p	5.6.9.1	Service Indicator	C	N/A
q	5.6.9.2	Subservice Field	C	N/A

ITEM NUMBER	PARAGRAPH IN GSCR	SUBJECT	TYPE OF SWITCHES	
			DVX/COTS	DVX/LEGACY
R	5.6.10	Formats and Codes of Signaling Network Management Messages	C	N/A
s	5.6.11	Numbering of Signaling Point Codes	C	N/A
u	5.6.12.2	End-to-End Signaling	C	N/A
v	5.6.13	Formats and Codes - Integrated Services Digital Network (ISDN) User Part Parameters	C	N/A
w	5.6.13.1	Notification Indicator	C	N/A
x	5.6.13.2	IS-UP Messages	C	N/A
y	5.6.13.3	IS-UP Parameters	C	N/A
z	5.7.1.1	Application	R	N/A
aa	5.7.1.2	Physical Layer	R	N/A
bb	5.7.1.2.1	S/T Reference Point	R	N/A
cc	5.7.1.3	Data-Link Layer	R	N/A
dd	5.7.1.3.1	Data-Link Connections	R	N/A
ee	5.7.1.3.2	Peer-to-Peer Procedures of the Data-Link Layer	R	N/A
ff	5.7.1.4	Layer 3 DSN User-to-Network Signaling	R	N/A
gg	5.7.1.4.2	DSN User-to-Network	R	N/A

		Signaling for Circuit-Switched (CS) Bearer Service		
hh	5.7.1.4.3	Sequence of Messages for DSN Circuit-Switched (CS) Calls	R	N/A
ii	5.7.1.4.4	Message Functional Definitions and Content	R	N/A
jj	5.7.1.4.5	General Message Format and Info Elements (IE) Coding	R	N/A
kk	5.7.1.4.6	Supplementary Services	C	N/A

ITEM NUMBER	PARAGRAPH IN GSCR	SUBJECT	TYPE OF SWITCHES	
			DVX/COTS	DVX/LEGACY
23	6.0	SECTION 6 - Transmission		
a	6.0	DISN/DSN Transmission Interface	R	R
b	6.1	Input Impedance	R	R
c	6.2	Inserted Connection Loss	R	R
d	6.2.1	Average Loss at 1004 hz and loss control	R	R
e	6.2.2	Loss Variability at 1004 hz	R	R
f	6.2.3	Attenuation Distortion	R	R
g	6.2.4	Tracking Error	R	R
h	6.3	Frequency Response	R	R
i	6.4	Overload Level	R	R
j	6.5	Return Loss	R	R
k	6.5.1	Two-Wire Line Return Loss	R	R
l	6.5.2	Four- Wire Trunk Return loss (Impedance)	R	R
m	6.6	Longitudinal Balance	R	R
n	6.7	60 Hz Longitudinal Current	R	R
o	6.8	Idle Channel Noise	R	R
p	6.8.1	C-Message Weighting	R	R
q	6.8.2	Flat-Weighting Noise	R	R
p	6.9	Power Line Interference	R	R
r	6.10	Impulse Noise	R	R
s	6.11	Crosstalk Coupling	R	R

u	6.12	Intermodulation Distortion	R	R
t	6.13	Signal to Distortion Ratio (C-Notched Noise)	R	R
u	6.14	Absolute Delay	R	R
v	6.15	Envelope Delay Distortion	R	R
w	6.15.1	Echo Path delay	R	R
x	6.16	Bit Integrity	R	R
y	6.17	Switched Digital Bit Error Rate	R	R
z	6.18	Encoding and Decoding Levels	R	R
aa	6.18.1	DSN Fixed Loss Plan	R	R
bb	6.18.1.1	Switch Transmission Level Points (TLPs)	R	R
24	7.0	SECTION 7 - System Interfaces		
a	7.1	PCM-24 Digital Trunk Interface	R	R
b	7.1.1	Interface characteristics	R	R
c	7.1.2	Supervisory Channel Associated Signaling	R	R
d	7.1.3	Clear Channel Capability (CCC)	R	R
e	7.1.4	Alarm and Restoral Requirements	R	R
f	7.2	PCM-30 Digital Trunk Interface	R	R
g	7.3	Interoperation of PCM-24 and PCM-30 Systems	R	R

ITEM NUMBER	PARAGRAPH IN GSCR	SUBJECT	TYPE OF SWITCHES	
			DVX/COTS	DVX/LEGACY
25	7.4	Analog Trunk Interface		
a	7.4.1	E&M Trunk Circuits	R	R
b	7.4.2	Single Frequency (SF) Trunk Circuits	R	R
c	7.4.3	Dual Frequency (DF) Trunk Circuits	R	R
d	7.5	Integrated Digital Loop Carrier (IDLC)	R	R
26	8.0	SECTION 8 - Tandem Switching		
a	8.3	Tandem Capabilities	C	C
b	8.4	Call Processing	C	C
c	8.5	Signaling	C	C
d	8.6	Transmission	C	C
27	8.7	Measurements and Administration	C	C
a	8.8	Service Standards	C	C
b	8.9	Network Management (NM)	C	C
28	9.0	SECTION 9 - Network Management		
a	9.1	DISA Network Traffic Management Operating System (NTMOS)	R	C
b	9.2.1.1	Data Quality	R	R
c	9.2.2.1.1	Traffic Measurements	R	R
d	9.2.2.1.2	Reference Data	C	C
e	9.2.2.2	Line Servicing	C	C
f	9.2.2.3	Trunk Groups	C	C

g	9.2.2.4	Call Processor	C	C
h	9.2.2.5	Switch Services	C	C
i	9.2.2.6	Special Studies	C	C
j	9.2.2.7	Remote Switching Site	C	C
k	9.2.2.8	Features	C	C
l	9.2.3	Common Channel Signaling Network (CCSN) Measurements	C	N/A
m	9.2.4	ISDN Measurements	R	N/A
n	9.2.5	Traffic Capacity	R	R
o	9.3	Configuration Management	R	R

ITEM NUMBER	PARAGRAPH IN GSCR	SUBJECT	TYPE OF SWITCHES	
			DVX/COTS	DVX/LEGACY
29	9.4	Fault Management	R	R
a	9.5.1	DSN Settable MDR Fields	R	C
b	9.5.2	Data Retention	C	C
c	9.6.1	Automatic Controls	C	C
d	9.6.1.1	Automatic Congestion Controls (ACC)	C	C
e	9.6.1.2	Trunk Reservation (TRE)	C	C
f	9.6.1.3	Selective Incoming Load Controls (SILC)	C	C
g	9.6.2.1	Essential Service Protection (ESP)	C	C
h	9.6.3	Manual Controls	C	C
i	9.6.3.1	Trunk Group Controls	C	C
j	9.6.3.1.1	Cancel From (CANF)	C	C
k	9.6.3.1.2	Cancel To (CANT)	C	C
l	9.6.3.1.3	SKIP	C	C
m	9.6.3.1.4	Reroute (RR)	C	C
n	9.6.3.1.4.1	Single-Via-Route	C	C
o	9.6.3.1.4.2	Multiple-Via-Route	C	C
p	9.6.3.1.4.3	Overflow (ORR) vs Immediate Reroute (IRR)	C	C
q	9.6.3.2	Code Controls	C	C
r	9.6.3.2.1	Code Controls - Code Gapping Controls	C	C
s	9.6.3.3	Total Office Manual Control Removal - Request/Response	C	C
t	9.6.4	Treatment Options Of Calls That Are Terminated	C	C
u	9.7	Remote Access to Switch	R	C
v	9.8	Accounting Management Data	C	C

ITEM NUMBER	PARAGRAPH IN GSCR	SUBJECT	TYPE OF SWITCHES	
			DVX/COTS	DVX/LEGACY
30	10.00	SECTION 10 - Integrated Services Digital Network (ISDN) Generic Requirements	R refer to section 10 of the GSCR	N/A
31	11.00	SECTION 11 - Synchronization		
a	11.1	Timing Modes	R	R
b	11.1.1	External Timing Mode	R	R
c	11.1.2	Internal Clock Requirements	R	R
d	11.1.2.1	General	C	C
e	11.1.2.2	Stratum 4 Clock	R	R
f	11.2	Synchronization Performance Monitoring Criteria	C	C
g	11.3	DS1	C	R
h	11.4	DS0 Traffic Interconnects	C	R
32	12.00	Section 12 - Reliability	R	R
33	13.00	Section 13 – Security	C	C

Legend:
R- Requirement. Must be met for certification

C- C onditional Requirement. If this feature or capability is provided, the switch shall perform and meet the specifications as identitfied in this GSCR.

N/A- Functional area does not apply for this switch type.